LOT 11
IN OR 2189/1067
BARRINGTON PB 7/115

ODDO LOUIS/MCKINNON JEANNE LOIS
713 BARRINGTON DRIVE
FERNANDINA BEACH, FL 32034

2023

00-00-31-110B-0011-0000

BUILDING CHARACTERISTICS

ELEMENT	CD	CONSTRUCTION
Exterior Wall	10	ABOVE AVG 100
Roof Structur	08	IRREGULAR 100
Roof Cover	03	COMP SHNGL 100
Interior Wall	05	DRYWALL 100
Interior Floo	11	CLAY TILE 100
Air Condition	03	CENTRAL 100
Heating Type	04	AIR DUCTED 100
Bedrooms		3 100
Bathrooms		2 100
Frame	02	WOOD FRAME 100
Stories	1.	1. 100
Units		0 100
Occupancy	00	NONE 100
Quality	05	Quality Level 05

DOR CODE 0100 SINGLE FAMILY
MAP NUM | MKT AREA 01
NEIGHBORHOOD/LOC 1082.00

AREA TYPE	TOTAL GROSS AREA	PCT OF BASE	TOT ADJ AREA	SUBAREA MARKET VALUE
BAS	2,167	100	2,167	324,898
FGR	640	55	352	52,775
FOP	68	30	20	2,999
FOP	135	30	40	5,998
PTO	375	5	19	2,849
TOTALS	3,385		2,598	389,519

MARKET ADJUSTMENTS

TYPE	MDL	EFF. AREA	TOT ADJ PTS	EFF. BASE RATE	REPL. COST NEW	AYB	EYB	ECON	FNCT		NORM	% COND
0900	01	2,598	128.8320	152.99	397,468	2017	2017	0	0	0	2.00	98.00

1 SNGL FAM – 100% - 2018 Heated Area: 2167 HX Base Yr 2018

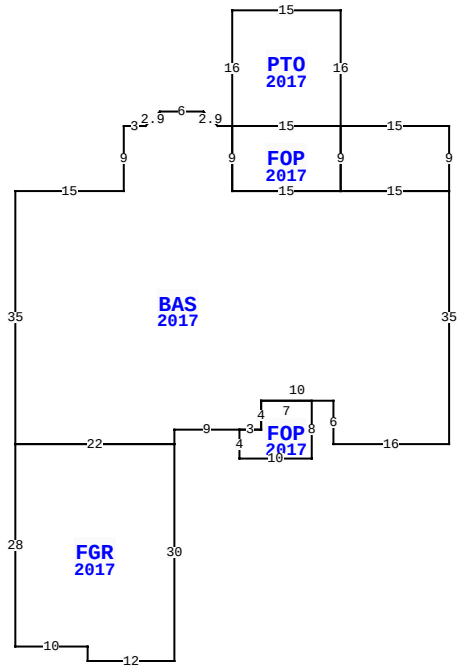

713 BARRINGTON DR, FERNANDINA BEACH

BLD DATE		LGL DATE	
XF DATE		LAND DATE	
INC DATE		AG DATE	

NASSAU COUNTY PROPERTY

PAGE 1 of 1 2

VALUATION SUMMARY

VALUATION BY		STANDARD
Tax Group: 2	Tax Dist:	
BUILDING MARKET VALUE		389,519
TOTAL MARKET OB/XF VALUE		18,799
TOTAL LAND VALUE - MARKET		215,000
TOTAL MARKET VALUE		623,318
SOH/AGL Deduction		368,898
ASSESSED VALUE		254,420
TOTAL EXEMPTION VALUE	HX HB	50,000
BASE TAXABLE VALUE		204,420
TOTAL JUST VALUE		623,318
NCON VALUE		0
INCOME VALUE		
PREVIOUS YEAR MKT VALUE		493,261

PERMIT NUM	DESCRIPTION	AMT	ISSUED
20161826	CO ISSUED	0	01/18/2017
20161826	NEW CONSTR	280,240	06/14/2016

SALES DATA

OFF RECORD Number	DATE	TYPE INST	Q U	V I	RSN CD	SALE PRICE
2189/1067	2/26/2016	WD	U	I	11	100
GRANTOR: DESILET RANDY L & PAT						
GRANTEE: ODDO LOUIS & JEANNE						
2030/1976	2/26/2016	WD	Q	V	02	80,000
GRANTOR: DESILET RANDY L & PAT						
GRANTEE: ODDO LOUIS & JEANNE						

BUILDING NOTES

BUILDING DIMENSIONS

PTO=[YR=2017] W15 N16 W15 S16 BAS=[YR=2017] W2 U2 L2 W6 D2 L2 W3 S9 W15 S35 FGR=[YR=2017] S28 E10 S2 E12 N30 W22$ E22 N2 E9 FOP=[YR=2017] S4 E10 N8 W7 S4 W3$ E3 N4 E10 S6 E16 N35 W15 FOP=[YR=2017] N9 W15 S9 E15$ W15 N9$ E15 S9 E15 N9$.

EXTRA FEATURES

LN	OB/XF CODE	DESCRIPTION	BLD	CAP	L	W	UNITS	UT	Adj R	ADJ UNIT PRICE	ORIG COND	YEAR ON	YEAR ACTUAL	Q	% COND	OB/XF MKT VALUE	NOTES
1	0855	CONC PAVER	0	100	0	0	1,642.00	SF	7.00	7.00	100	2017	2017	3	97	11,149	
2	0462	ST/AL FNC	0	100	0	0	432.00	SF	10.00	10.00	100	2017	2017	3	87	3,758	
3	0476	VF 6 SBPL	0	100	0	0	120.00	LF	32.00	32.00	100	2017	2017	3	94	3,610	
4	0470	VNYL GATE	0	100	0	0	1.00	UT	300.00	300.00	100	2017	2017	3	94	282	

LAND DESCRIPTION

TOTAL OB/XF 18,799

LN	USE CODE	CLS	LAND USE DESCRIPTION	CAP	RD	LOC ZONE	FRONT	DEPTH	TOT LND UTS	UNIT TYPE	DT	DPTH FACT	% COND	TOT ADJ	UNIT PRICE	ADJ UNIT PRICE	LAND VALUE	OTHER ADJUSTMENTS AND NOTES	YEAR	DENSITY	DECL	FRZ	YR	CONSRV
1	000100	C	SFR	100			0.00	0.00	1.00	LT		1.00	1.00	1.00	215,000.00	215,000.00	215,000							

REVIEW DATE 02/08/2017 BY DJ Total Acres: 0.00 Total Land Value: 215,000 Market: 0 Agricultural: 0 Common: 215,000 PRINTED 08/02/2023 BY SYS