BLOCK K LOT 2
IN OR 1708/791
ATLANTIC HIGHLANDS SUB

CARTER PETER A/MCALPINE MARGARET A
1626 BROOME STREET
FERNANDINA BEACH, FL 32034

2023

00-00-31-1060-000K-0020

NASSAU COUNTY PROPERTY

BUILDING CHARACTERISTICS

ELEMENT	CD	CONSTRUCTION
Exterior Wall	19	COMMON BRK 70
Exterior Wall	23	REINF CONC 30
Roof Structur	03	GABLE/HIP 100
Roof Cover	03	COMP SHNGL 100
Interior Wall	05	DRYWALL 100
Interior Floo	12	HARDWOOD 100
Air Condition	03	CENTRAL 100
Heating Type	04	AIR DUCTED 100
Bedrooms		6 100
Bathrooms		3.5 100
Frame	03	MASONRY 100
Stories	2.5	2.5 100
Units		0 100
BUD8 Adjustme	02	DIST FB 100
Occupancy	00	NONE 100
Quality	03	Quality Level 03
DOR CODE	0100	SINGLE FAMILY
MAP NUM		MKT AREA 01
NEIGHBORHOOD/LOC	1007.00	

AREA TYPE	TOTAL GROSS AREA	PCT OF BASE	TOT ADJ AREA	SUBAREA MARKET VALUE
BAS	1,066	100	1,066	78,782
BAS	322	100	322	23,797
BAS	364	100	364	26,901
FBM	836	80	669	49,442
FDG	1,020	60	612	45,229
FOP	104	30	31	2,291
FUS	1,036	100	1,036	76,564
PTO	54	5	3	222
PTO	140	5	7	517
PTO	182	5	9	665
TOTALS	6,624		4,371	323,034

MARKET ADJUSTMENTS

TYPE	MDL	EFF. AREA	TOT ADJ PTS	EFF. BASE RATE	REPL. COST NEW	AYB	EYB	ECON	FNCT		NORM	% COND
0100	01	4,371	109.9120	99.20	433,603	1960	1985	0	0	0	25.50	74.50

1 SINGLE FAM – 100% - 2011 Heated Area: 3457 HX Base Yr 2011

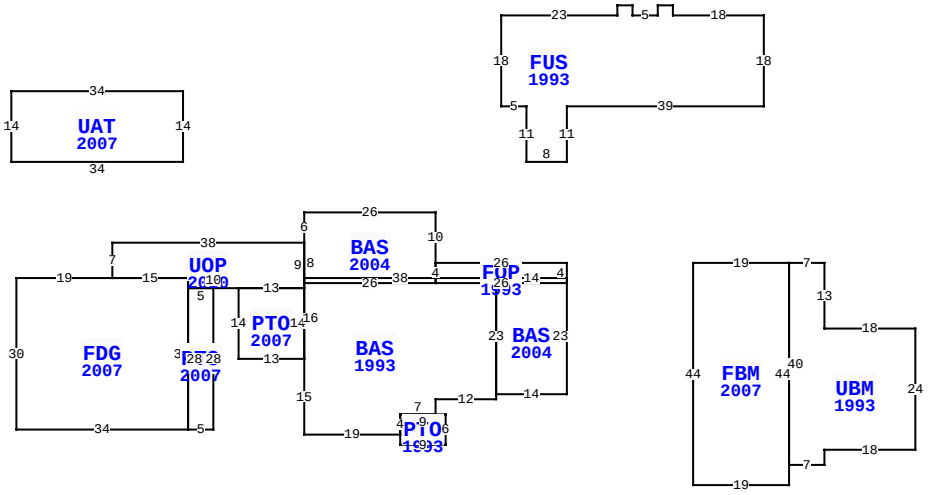

** This building has 13 Sub-Areas

1626 BROOME ST, FERNANDINA BEACH

BLD DATE		LGL DATE	
XF DATE		LAND DATE	
INC DATE		AG DATE	

VALUATION SUMMARY

VALUATION BY		STANDARD
Tax Group: 2	Tax Dist:	
BUILDING MARKET VALUE		323,034
TOTAL MARKET OB/XF VALUE		39,406
TOTAL LAND VALUE - MARKET		275,000
TOTAL MARKET VALUE		637,440
SOH/AGL Deduction		387,802
ASSESSED VALUE		249,638
TOTAL EXEMPTION VALUE	HX HB	50,000
BASE TAXABLE VALUE		199,638
TOTAL JUST VALUE		637,440
NCON VALUE		0
INCOME VALUE		
PREVIOUS YEAR MKT VALUE		552,465

PERMIT NUM	DESCRIPTION	AMT	ISSUED
20053089	OTHER	2,000	11/29/2005
20051939	GARAGE	11,000	06/08/2005
20051918	REMODEL	1,000	06/07/2005
20032589	CHNGE SRVC	1,000	02/26/2003
2004139	XFOB	4,000	10/13/2000
2003917	SWIM POOL	43,000	09/07/2000

SALES DATA

OFF RECORD Number	DATE	TYPE INST	Q U	V I	RSN CD	SALE PRICE
1708/0791	10/29/2010	WD	Q	I	01	290,000
GRANTOR: MURRAY PATRICIA						
GRANTEE: CARTER PETER A & MA						
1032/0593	1/22/2002	TD	Q	I		195,000
GRANTOR: LOWE LOUIS D JR & BAR						
GRANTEE: MURRAY CHRISTOPHER						

BUILDING NOTES

BUILDING DIMENSIONS

FOP=[YR=1993] W26 BAS=[YR=2004] N10 W26 S6 UOP=[YR=2010] W38 S7 FDG=[YR=2007] W19 S30 E34 PTO=[YR=2007] E5 N28 W5 S28$ N30 W15$E15S2 E10 PTO=[YR=2007] S14 E13 BAS=[YR=1993] S15 E19 PTO=[YR=1993] S2 E9 N6 W9 S4 $ N4 E7 N3 E12 N1 BAS=[YR=2004] E14 N23 W14 S23 $ N23 W38 S16$ N14 W13$ E13 N9$ S8 E26 N4$ S4 E26 N4$ PTR= E25 FBM=[YR=2007] E19 UBM=[YR=1993] E7 S13 E18 S24 W18 S3 W7 N40 $S44 W19 N44 $ W25 $ PTR= N20 FUS=[YR=1993] N11 E39 N18 W18 N2 W3S2 W5 N2 W3 S2 W23 S18 E5 S11 E8 $ S20 $ PTR= N20W110 UAT=[YR=2007] N14 E34 S14 W34$ E110S20$.

EXTRA FEATURES

LN	OB/XF CODE	DESCRIPTION	BLD	CAP	L	W	UNITS	UT	Adj R	ADJ UNIT PRICE	ORIG COND	YEAR ON	YEAR ACTUAL	Q	% COND	OB/XF MKT VALUE	NOTES
1	0810	CONCRETE A	0	100	0	0	714.00	SF	6.50	6.50	100	1960	1960	3	20	928	
3	0500	FP-PRE FAB	0	100	0	0	1.00	UT	3,500.00	3,500.00	100	2000	2000	3	85	2,975	
4	0810	CONCRETE A	0	100	14	13	182.00	SF	6.50	6.50	100	2002	2002	3	83	982	
5	1241	WD DECK G	0	100	0	0	400.00	UT	17.25	17.25	100	2004	2004	3	40	2,760	
6	0920	CWALL-WD/M	0	100	0	0	14.00	LF	390.00	390.00	100	2004	2004	3	24	1,310	
7	0861	POOL GUNIT	0	100	0	0	470.00	SF	85.00	85.00	100	2001	2001	3	29	11,586	
8	0845	KOOL DECK	0	100	0	0	716.00	SF	14.50	14.50	100	2001	2001	3	82	8,513	
9	0910	SCRN RM L	0	100	39	30	1,170.00	SF	15.00	15.00	100	2001	2001	3	20	3,510	
10	0871	POOL HTR R	0	100	0	0	1.00	UT	4,000.00	4,000.00	100	2001	2001	3	20	800	
11	0810	CONCRETE A	0	100	51	3	153.00	SF	6.50	6.50	100	2002	2002	3	83	825	

TOTAL OB/XF 34,189

LAND DESCRIPTION

LN	USE CODE	CLS	LAND USE DESCRIPTION	CAP	RD	LOC ZONE	FRONT	DEPTH	TOT LND UTS	UNIT TYPE	DT	DPTH FACT	% COND	TOT ADJ	UNIT PRICE	ADJ UNIT PRICE	LAND VALUE	OTHER ADJUSTMENTS AND NOTES	YEAR	DENSITY	DECL	FRZ	YR	CONSRV
1	000100	C	SFR	100	0006	R-1	134.00	137.00	1.00	LT		1.00	1.00	1.00	275,000.00	275,000.00	275,000							

REVIEW DATE 04/21/2017 BY DJX Total Acres: 0.00 Total Land Value: 275,000 Market: 0 Agricultural: 0 Common: 275,000 PRINTED 08/02/2023 BY SYS

BLOCK K LOT 2
IN OR 1708/791
ATLANTIC HIGHLANDS SUB

CARTER PETER A/MCALPINE MARGARET A
1626 BROOME STREET
FERNANDINA BEACH, FL 32034

2023

00-00-31-1060-000K-0020

NASSAU COUNTY PROPERTY

BUILDING CHARACTERISTICS

ELEMENT	CD	CONSTRUCTION

DOR CODE	0100	SINGLE FAMILY	
MAP NUM		MKT AREA	01
NEIGHBORHOOD/LOC	1007.00		

AREA TYPE	TOTAL GROSS AREA	PCT OF BASE	TOT ADJ AREA	SUBAREA MARKET VALUE
TOTALS				

MARKET ADJUSTMENTS

TYPE	MDL	EFF. AREA	TOT ADJ PTS	EFF. BASE RATE	REPL. COST NEW	AYB	EYB	ECON	FNCT		NORM	% COND

BLD DATE		LGL DATE	
XF DATE		LAND DATE	
INC DATE		AG DATE	

VALUATION SUMMARY

VALUATION BY		STANDARD
Tax Group: 2	Tax Dist:	
BUILDING MARKET VALUE		323,034
TOTAL MARKET OB/XF VALUE		39,406
TOTAL LAND VALUE - MARKET		275,000
TOTAL MARKET VALUE		637,440
SOH/AGL Deduction		387,802
ASSESSED VALUE		249,638
TOTAL EXEMPTION VALUE	HX HB	50,000
BASE TAXABLE VALUE		199,638
TOTAL JUST VALUE		637,440
NCON VALUE		0
INCOME VALUE		
PREVIOUS YEAR MKT VALUE		552,465

PERMIT NUM	DESCRIPTION	AMT	ISSUED
6455	ADDITION	9,000	04/03/1991

SALES DATA

OFF RECORD Number	DATE	TYPE INST	Q U /	V I /	RSN CD	SALE PRICE
1708/0791	10/29/2010	WD	Q	I	01	290,000
GRANTOR: MURRAY PATRICIA						
GRANTEE: CARTER PETER A & MA						
1032/0593	1/22/2002	TD	Q	I		195,000
GRANTOR: LOWE LOUIS D JR & BAR						
GRANTEE: MURRAY CHRISTOPHER						

BUILDING NOTES

BUILDING DIMENSIONS

EXTRA FEATURES

LN	OB/XF CODE	DESCRIPTION	BLD	CAP	L	W	UNITS	UT	Adj R	ADJ UNIT PRICE	ORIG COND	YEAR ON	YEAR ACTUAL	Q	% COND	OB/XF MKT VALUE	NOTES
12	0810	CONCRETE A	0	100	0	0	158.00	SF	6.50	6.50	100	2004	2004	3	86	883	
13	0510	GARAGE WD-	0	100	16	16	256.00	SF	35.00	35.00	100	2004	2004	3	40	3,584	
14	1242	WD DECK A	0	100	18	6	108.00	SF	10.00	10.00	100	2004	2004	3	24	259	
15	1076	TRELLIS A	0	100	14	9	126.00	SF	7.50	7.50	100	2007	2007	3	52	491	

LAND DESCRIPTION

TOTAL OB/XF 5,217

LN	USE CODE	CLS	LAND USE DESCRIPTION	CAP	RD	LOC ZONE	FRONT	DEPTH	TOT LND UTS	UNIT TYPE	DT	DPTH FACT	% COND	TOT ADJ	UNIT PRICE	ADJ UNIT PRICE	LAND VALUE	OTHER ADJUSTMENTS AND NOTES	YEAR	DENSITY	DECL	FRZ	YR	CONSRV

REVIEW DATE 04/21/2017 BY DJX Total Acres: 0.00 Total Land Value: 275,000 Market: 0 Agricultural: 0 Common: 275,000 PRINTED 08/02/2023 BY SYS