BLOCK F LOT E 69 FT OF 2
IN OR 2321/1227
ATLANTIC HIGHLANDS DB 39/297

ALVAREZ JOHN B JR & DARCY P
2012 HIGHLAND ST
FERNANDINA BEACH, FL 32034

2023

00-00-31-1060-000F-0021

BUILDING CHARACTERISTICS

ELEMENT	CD	CONSTRUCTION
Exterior Wall	10	ABOVE AVG 100
Roof Structur	03	GABLE/HIP 100
Roof Cover	03	COMP SHNGL 100
Interior Wall	05	DRYWALL 100
Interior Floo	08	SHT VINYL 100
Air Condition	03	CENTRAL 100
Heating Type	04	AIR DUCTED 100
Bedrooms		3 100
Bathrooms		3 100
Frame	02	WOOD FRAME 100
Stories	1.5	1.5 100
Units		0 100
Occupancy	00	NONE 100
Quality	06	Quality Level 06

DOR CODE	0100	SINGLE FAMILY	
MAP NUM		MKT AREA	01
NEIGHBORHOOD/LOC	1007.00		

AREA TYPE	TOTAL GROSS AREA	PCT OF BASE	TOT ADJ AREA	SUBAREA MARKET VALUE
BAS	2,354	100	2,354	320,745
FGR	750	55	412	56,137
FOP	196	30	59	8,039
FOP	385	30	116	15,806
FUS	330	100	330	44,964
PTO	12	5	1	136
PTO	12	5	1	136
TOTALS	4,039		3,273	445,964

MARKET ADJUSTMENTS

TYPE	MDL	EFF. AREA	TOT ADJ PTS	EFF. BASE RATE	REPL. COST NEW	AYB	EYB	ECON	FNCT		NORM	% COND
0900	01	3,273	115.3220	136.94	448,205	2020	2020	0	0	0	0.50	99.50

1 SNGL FAM – 100% - 2021 Heated Area: 2684 HX Base Yr 2021

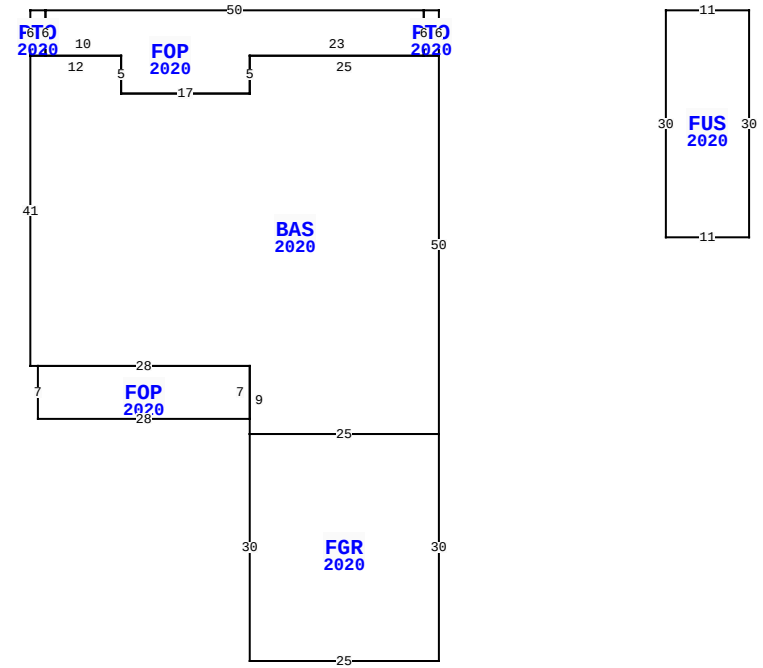

2012 HIGHLAND ST, FERNANDINA BEACH

BLD DATE		LGL DATE	
XF DATE		LAND DATE	
INC DATE		AG DATE	

NASSAU COUNTY PROPERTY

PAGE 1 of 1 2

VALUATION SUMMARY

VALUATION BY		STANDARD
Tax Group: 2	Tax Dist:	
BUILDING MARKET VALUE		445,964
TOTAL MARKET OB/XF VALUE		14,492
TOTAL LAND VALUE - MARKET		225,000
TOTAL MARKET VALUE		685,456
SOH/AGL Deduction		241,720
ASSESSED VALUE		443,736
TOTAL EXEMPTION VALUE	HX HB	50,000
BASE TAXABLE VALUE		393,736
TOTAL JUST VALUE		685,456
NCON VALUE		0
INCOME VALUE		
PREVIOUS YEAR MKT VALUE		596,871

PERMIT NUM	DESCRIPTION	AMT	ISSUED
20190643	NEW CONSTR	0	02/18/2020

SALES DATA

OFF RECORD Number	DATE	TYPE INST	Q U	V I	RSN CD	SALE PRICE
2321/1227	11/25/2019	WD	U	V	11	100
GRANTOR: BROWN KAREN J & CARL						
GRANTEE: ALVAREZ JOHN B JR &						
2321/1224	11/25/2019	QC	U	I	11	100
GRANTOR: ALVAREZ JOHN B JR & D						
GRANTEE: BROWN KAREN JONES &						

BUILDING NOTES

BUILDING DIMENSIONS

PTO=[YR=2020] W2 FOP=[YR=2020] W50 PTO=[YR=2020] W2 S6
BAS=[YR=2020] S41 E1 FOP=[YR=2020] S7 E28 N7 W28$E28 S9
FGR=[YR=2020] S30 E25 N30 W25 $ E25 N50 W25 S5 W17 N5 W12 $
E2 N6 $ S6 E10 S5 E17 N5 E23 N6 $ S6 E2 N6 $ PTR= E30
FUS=[YR=2020] E11 S30 W11 N30 $ W30$.

EXTRA FEATURES

LN	OB/XF CODE	DESCRIPTION	BLD	CAP	L	W	UNITS	UT	Adj R	ADJ UNIT PRICE	ORIG COND	YEAR ON	YEAR ACTUAL	Q	% COND	OB/XF MKT VALUE	NOTES
1	0811	CONCRETE B	0	100	0	0	2,815.00	SF	5.20	5.20	100	2020	2020	3	99	14,492	

LAND DESCRIPTION

TOTAL OB/XF 14,492

LN	USE CODE	CLS	LAND USE DESCRIPTION	CAP	RD	LOC ZONE	FRONT	DEPTH	TOT LND UTS	UNIT TYPE	DT	DPTH FACT	% COND	TOT ADJ	UNIT PRICE	ADJ UNIT PRICE	LAND VALUE	OTHER ADJUSTMENTS AND NOTES	YEAR	DENSITY	DECL	FRZ	YR	CONSRV
1	000100	C	SFR	100	0006	R-1	69.00	136.00	1.00	LT		1.00	1.00	1.00	225,000.00	225,000.00	225,000							

REVIEW DATE 01/14/2021 BY RK Total Acres: 0.00 Total Land Value: 225,000 Market: 0 Agricultural: 0 Common: 225,000 PRINTED 08/02/2023 BY SYS