LOT 8
AMELIA PARK COTTAGE BLOCK
PB 7/211

KABATH BRUCE & MARIA C
1768 CAMELLIA STREET
FERNANDINA BEACH, FL 32034

2023

00-00-31-102R-0008-0000

BUILDING CHARACTERISTICS

ELEMENT	CD	CONSTRUCTION
Exterior Wall	10	ABOVE AVG 100
Roof Structur	08	IRREGULAR 100
Roof Cover	03	COMP SHNGL 100
Interior Wall	05	DRYWALL 100
Interior Floo	11	CLAY TILE 100
Air Condition	03	CENTRAL 100
Heating Type	04	AIR DUCTED 100
Bedrooms		3 100
Bathrooms		2.5 100
Frame	02	WOOD FRAME 100
Stories	1.	1. 100
Units		0 100
Occupancy	00	NONE 100
Quality	05	Quality Level 05

DOR CODE 0100 SINGLE FAMILY
MAP NUM | MKT AREA 01
NEIGHBORHOOD/LOC 1031.00

AREA TYPE	TOTAL GROSS AREA	PCT OF BASE	TOT ADJ AREA	SUBAREA MARKET VALUE
BAS	2,272	100	2,272	401,600
FGR	523	55	288	50,907
FOP	155	30	46	8,131
FOP	261	30	78	13,787
TOTALS	3,211		2,684	474,427

MARKET ADJUSTMENTS

TYPE	MDL	EFF. AREA	TOT ADJ PTS	EFF. BASE RATE	REPL. COST NEW	AYB	EYB	ECON	FNCT		NORM	% COND
0500	01	2,684	129.8880	185.09	496,782	2012	2012	0	0	0	4.50	95.50

1 SFR CUST – 0% - 2023 Heated Area: 2272 HX Base Yr

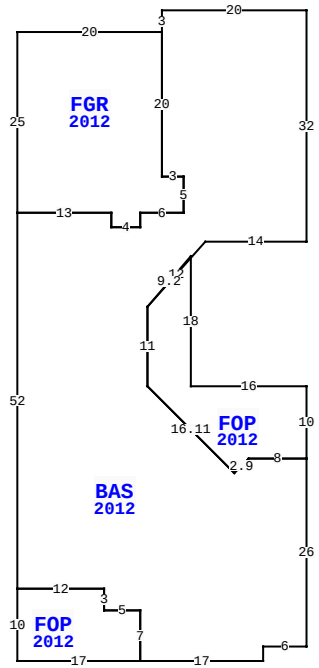

1768 CAMELLIA ST, FERNANDINA BEACH

BLD DATE		LGL DATE	
XF DATE		LAND DATE	
INC DATE		AG DATE	

NASSAU COUNTY PROPERTY

PAGE 1 of 1 2

VALUATION SUMMARY

VALUATION BY	STANDARD
Tax Group: 2	Tax Dist:
BUILDING MARKET VALUE	474,427
TOTAL MARKET OB/XF VALUE	39,870
TOTAL LAND VALUE - MARKET	150,000
TOTAL MARKET VALUE	664,297
SOH/AGL Deduction	0
ASSESSED VALUE	664,297
TOTAL EXEMPTION VALUE	0
BASE TAXABLE VALUE	664,297
TOTAL JUST VALUE	664,297
NCON VALUE	514,297
INCOME VALUE	
PREVIOUS YEAR MKT VALUE	615,925

PERMIT NUM	DESCRIPTION	AMT	ISSUED
20180556	SWIM POOL	34,000	02/16/2018
20111391	NEW CONSTR	324,144	07/22/2011

SALES DATA

OFF RECORD Number	DATE	TYPE INST	Q / U	V / I	RSN CD	SALE PRICE
2623/1692	3/06/2023	WD	Q	I	01	975,000
GRANTOR: DUKE DIANE W REVOCABL						
GRANTEE: KABATH BRUCE & MARI						
2623/1680	1/31/2023	TD	U	I	11	100
GRANTOR: DWD INHERITANCE IRREV						
GRANTEE: DUKE DIANE W REVOCA						

BUILDING NOTES

BUILDING DIMENSIONS

BAS=[YR=2012] W20S3 FGR=[YR=2012] W20S25 E13S2E4N2E6N5W3N20$
S20E3S5W6 S2W4N2W13S52 FOP=[YR=2012] S10E17N7 W5N3W12$
E12S3E5S7E17N2E6 N26 FOP=[YR=2012] N10 W16 N18 D7 L6 S11
D12 R12 U2 R2 E8$ W8 D2 L2 L12 U12 N11 U9 R8 E14N32$.

EXTRA FEATURES

LN	OB/XF CODE	DESCRIPTION	BLD	CAP	L	W	UNITS	UT	Adj R	ADJ UNIT PRICE	ORIG COND	YEAR ON	YEAR ACTUAL	Q	% COND	OB/XF MKT VALUE	NOTES
1	0500	FP-PRE FAB	0	0	0	0	1.00	UT	3,500.00	3,500.00	100	2012	2012	3	96	3,360	
2	0855	CONC PAVER	0	0	19	5	95.00	SF	8.70	8.70	100	2012	2012	3	94	777	
3	0855	CONC PAVER	0	0	0	0	214.00	SF	10.00	10.00	100	2012	2012	3	94	2,012	
4	0910	SCRN RM L	0	0	20	16	320.00	SF	15.00	15.00	100	2012	2012	3	60	2,880	
5	0476	VF 6 SBPL	0	0	0	0	150.00	LF	32.00	32.00	100	2012	2012	3	85	4,080	
6	0861	POOL GUNIT	0	0	0	0	290.00	SF	85.00	85.00	100	2018	2018	3	90	22,185	
7	0855	CONC PAVER	0	0	0	0	674.00	SF	7.00	7.00	100	2017	2017	3	97	4,576	

LAND DESCRIPTION

TOTAL OB/XF 39,870

LN	USE CODE	CLS	LAND USE DESCRIPTION	CAP	RD	LOC ZONE	FRONT	DEPTH	TOT LND UTS	UNIT TYPE	DT	DPTH FACT	% COND	TOT ADJ	UNIT PRICE	ADJ UNIT PRICE	LAND VALUE	OTHER ADJUSTMENTS AND NOTES	YEAR	DENSITY	DECL	FRZ	YR	CONSRV
1	000100	C	SFR	0	0003	R-2	0.00	0.00	50.00	FF		1.00	1.00	1.00	3,000.00	3,000.00	150,000							

REVIEW DATE 08/16/2018 BY DJ Total Acres: 0.00 Total Land Value: 150,000 Market: 0 Agricultural: 0 Common: 150,000 PRINTED 08/02/2023 BY SYS