BLOCK 23 LOT 6
IN OR 1925/1656
AMELIA PARK PHASE 2 UNIT 8

GROTH C DANIEL TRUST/GROTH C DANIEL TRUSTEE
1773 SCHOOL ST
FERNANDINA BEACH, FL 32034

2023

00-00-31-102P-0023-0060

NASSAU COUNTY PROPERTY

BUILDING CHARACTERISTICS

ELEMENT	CD	CONSTRUCTION
Exterior Wall	10	ABOVE AVG 100
Roof Structur	08	IRREGULAR 100
Roof Cover	03	COMP SHNGL 70
Roof Cover	12	MODULAR MT 30
Interior Wall	05	DRYWALL 100
Interior Floo	12	HARDWOOD 70
Interior Floo	14	CARPET 30
Air Condition	03	CENTRAL 100
Heating Type	04	AIR DUCTED 100
Bedrooms		3 100
Bathrooms		3.5 100
Frame	02	WOOD FRAME 100
Stories	1.	1. 100
Units		0 100
Occupancy	00	NONE 100
Quality	05	Quality Level 05
DOR CODE	0100	SINGLE FAMILY
MAP NUM		MKT AREA 01
NEIGHBORHOOD/LOC	1031.00	

AREA TYPE	TOTAL GROSS AREA	PCT OF BASE	TOT ADJ AREA	SUBAREA MARKET VALUE
BAS	2,245	100	2,245	344,922
DCX	21	15	3	461
FDG	420	60	252	38,717
FUS	420	100	420	64,529
STR	10	10	1	154
STR	10	10	1	154
STR	15	10	2	307
STR	20	10	2	307
UOP	160	20	32	4,916
UOP	630	20	126	19,359
TOTALS	4,255		3,145	483,198

MARKET ADJUSTMENTS

TYPE	MDL	EFF. AREA	TOT ADJ PTS	EFF. BASE RATE	REPL. COST NEW	AYB	EYB	ECON	FNCT		NORM	% COND
0500	01	3,145	117.1896	167.00	525,215	2005	2005	0	0	0	8.00	92.00

1 SFR CUST - 100% - 2010 Heated Area: 2665 HX Base Yr 2010

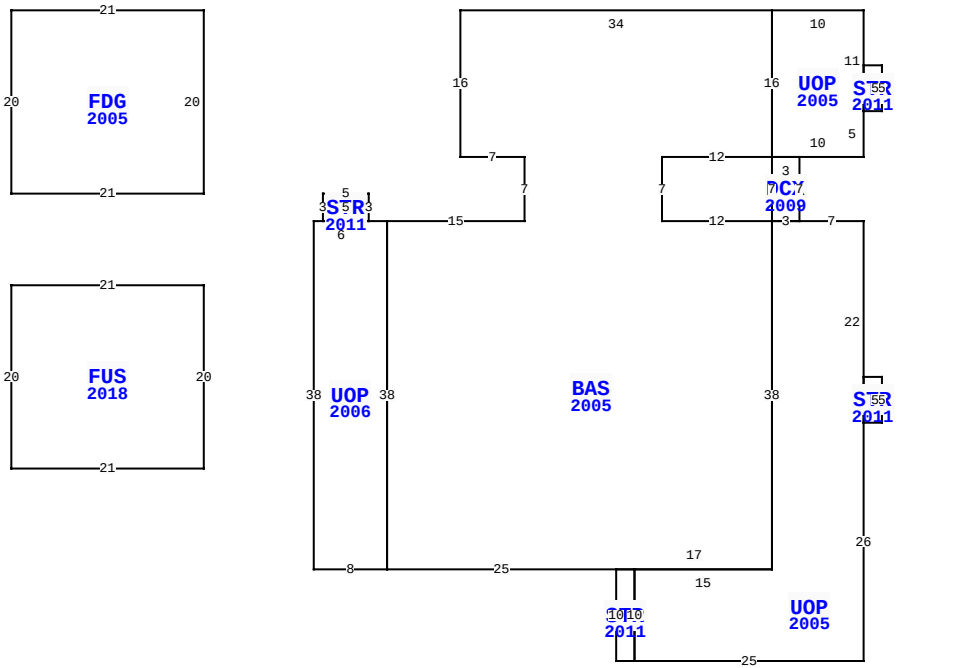

** This building has 11 Sub-Areas

1773 SCHOOL ST, FERNANDINA BEACH

BLD DATE		LGL DATE	
XF DATE		LAND DATE	
INC DATE		AG DATE	

NASSAU COUNTY PROPERTY — VALUATION SUMMARY

VALUATION BY		STANDARD
Tax Group: 2	Tax Dist:	
BUILDING MARKET VALUE		483,198
TOTAL MARKET OB/XF VALUE		41,921
TOTAL LAND VALUE - MARKET		150,000
TOTAL MARKET VALUE		675,119
SOH/AGL Deduction		255,138
ASSESSED VALUE		419,981
TOTAL EXEMPTION VALUE	HX HB	50,000
BASE TAXABLE VALUE		369,981
TOTAL JUST VALUE		675,119
NCON VALUE		0
INCOME VALUE		
PREVIOUS YEAR MKT VALUE		624,168

PERMIT NUM	DESCRIPTION	AMT	ISSUED
20173679	FUS/FGR	80,000	11/22/2017
20110683	XFOB	7,000	05/05/2011
20110473	ELEC OTHER	600	04/01/2011
20110411	REMODEL	9,000	03/22/2011
20110353	XFOB	2,144	03/14/2011
20110292	SWIM POOL	34,550	03/03/2011

SALES DATA

OFF RECORD Number	DATE	TYPE INST	Q / U	V / I	RSN CD	SALE PRICE
1925/1656	6/20/2014	WD	U	I	11	100
GRANTOR: GROTH C DANIEL						
GRANTEE: GROTH C DANIEL TRUS						
1600/1719	1/14/2009	QC	U	I	11	100
GRANTOR: TABER NANCY G TRUSTEE						
GRANTEE: GROTH C DANIEL						

BUILDING NOTES

BUILDING DIMENSIONS

UOP=[YR=2005] W10 BAS=[YR=2005] W34 S16 E7 S7 W15
UOP=[YR=2006] W2STR=[YR=2011] N3W5S3E5$W6S38 E8 N38 $ S38
E25 STR=[YR=2011] S10E2 UOP=[YR=2005] E25 N26 STR=[YR=2011]
E2N5W2S5$N22 W7 DCX=[YR=2009] N7W3S7E3$W3 S38 W15S10
$N10W2$E17 N38 W12 N7 E12 N16 $S16 E10N5STR=[YR=2011]
E2N5W2S5$ N11$ PTR= W72 FDG=[YR=2005] W21 S20 E21 N20 $ E72$
PTR=W72 S30 FUS=[YR=2018] W21 S20 E21 N20$ E72 N30$.

EXTRA FEATURES

LN	OB/XF CODE	DESCRIPTION	BLD	CAP	L	W	UNITS	UT	Adj R	ADJ UNIT PRICE	ORIG COND	YEAR ON	YEAR ACTUAL	Q	% COND	OB/XF MKT VALUE	NOTES
1	0500	FP-PRE FAB	0	100	0	0	1.00	UT	3,500.00	3,500.00	100	2005	2005	3	90	3,150	
2	0877	JACUZZI	0	100	0	0	1.00	UT	1,000.00	1,000.00	100	2005	2005	3	27	270	
3	0810	CONCRETE A	0	100	27	19	513.00	SF	6.50	6.50	100	2005	2005	3	87	2,901	
4	0810	CONCRETE A	0	100	0	0	400.00	SF	6.50	6.50	100	2005	2005	3	87	2,262	
5	0861	POOL GUNIT	0	100	0	0	200.00	SF	85.00	85.00	100	2011	2011	3	68	11,560	
6	0871	POOL HTR R	0	100	0	0	1.00	UT	4,000.00	4,000.00	100	2011	2011	3	55	2,200	
7	1244	WD DECK EX	0	100	0	0	845.00	SF	7.40	7.40	100	2011	2011	3	68	4,252	
8	0910	SCRN RM L	0	100	0	0	1,045.00	SF	15.00	15.00	100	2011	2011	3	55	8,621	
9	0855	CONC PAVER	0	100	0	0	261.00	SF	10.00	10.00	100	2011	2011	3	93	2,427	
10	0855	CONC PAVER	0	100	0	0	340.00	SF	10.00	10.00	100	2011	2011	3	93	3,162	

TOTAL OB/XF 40,805

LAND DESCRIPTION

LN	USE CODE	CLS	LAND USE DESCRIPTION	CAP	RD	LOC ZONE	FRONT	DEPTH	TOT LND UTS	UNIT TYPE	DT	DPTH FACT	% COND	TOT ADJ	UNIT PRICE	ADJ UNIT PRICE	LAND VALUE	OTHER ADJUSTMENTS AND NOTES	YEAR	DENSITY	DECL	FRZ	YR	CONSRV
1	000100	C	SFR	100	0003	PUD	0.00	0.00	50.00	FF		1.00	1.00	1.00	3,000.00	3,000.00	150,000							

REVIEW DATE 04/11/2018 BY DJX Total Acres: 0.00 Total Land Value: 150,000 Market: 0 Agricultural: 0 Common: 150,000 PRINTED 08/02/2023 BY SYS

BLOCK 23 LOT 6
IN OR 1925/1656
AMELIA PARK PHASE 2 UNIT 8

GROTH C DANIEL TRUST/GROTH C DANIEL TRUSTEE
1773 SCHOOL ST
FERNANDINA BEACH, FL 32034

2023

00-00-31-102P-0023-0060

NASSAU COUNTY PROPERTY

BUILDING CHARACTERISTICS

ELEMENT	CD	CONSTRUCTION

DOR CODE	0100	SINGLE FAMILY	
MAP NUM		MKT AREA	01
NEIGHBORHOOD/LOC	1031.00		

AREA TYPE	TOTAL GROSS AREA	PCT OF BASE	TOT ADJ AREA	SUBAREA MARKET VALUE
TOTALS				

MARKET ADJUSTMENTS

TYPE	MDL	EFF. AREA	TOT ADJ PTS	EFF. BASE RATE	REPL. COST NEW	AYB	EYB	ECON	FNCT		NORM	% COND

BLD DATE		LGL DATE	
XF DATE		LAND DATE	
INC DATE		AG DATE	

VALUATION SUMMARY

VALUATION BY		STANDARD
Tax Group: 2	Tax Dist:	
BUILDING MARKET VALUE		483,198
TOTAL MARKET OB/XF VALUE		41,921
TOTAL LAND VALUE - MARKET		150,000
TOTAL MARKET VALUE		675,119
SOH/AGL Deduction		255,138
ASSESSED VALUE		419,981
TOTAL EXEMPTION VALUE	HX HB	50,000
BASE TAXABLE VALUE		369,981
TOTAL JUST VALUE		675,119
NCON VALUE		0
INCOME VALUE		
PREVIOUS YEAR MKT VALUE		624,168

PERMIT NUM	DESCRIPTION	AMT	ISSUED
20051007	H/AC	6,000	01/07/2005
20042399	GARAGE	25,000	12/30/2004
20042068	NEW CONSTR	2,000	11/03/2004
20041984	NEW CONSTR	236,000	10/27/2004

SALES DATA

OFF RECORD Number	DATE	TYPE INST	Q U /	V I /	RSN CD	SALE PRICE
1925/1656	6/20/2014	WD	U	I	11	100
GRANTOR: GROTH C DANIEL						
GRANTEE: GROTH C DANIEL TRUS						
1600/1719	1/14/2009	QC	U	I	11	100
GRANTOR: TABER NANCY G TRUSTEE						
GRANTEE: GROTH C DANIEL						

BUILDING NOTES

BUILDING DIMENSIONS

EXTRA FEATURES

LN	OB/XF CODE	DESCRIPTION	BLD	CAP	L	W	UNITS	UT	Adj R	ADJ UNIT PRICE	ORIG COND	YEAR ON	YEAR ACTUAL	Q	% COND	OB/XF MKT VALUE	NOTES
11	0476	VF 6 SBPL	0	100	0	0	28.00	LF	32.00	32.00	100	2005	2005	3	69	618	
12	0470	VNYL GATE	0	100	0	0	2.00	UT	300.00	300.00	100	2011	2011	3	83	498	

TOTAL OB/XF 1,116

LAND DESCRIPTION

LN	USE CODE	CLS	LAND USE DESCRIPTION	CAP	RD	LOC ZONE	FRONT	DEPTH	TOT LND UTS	UNIT TYPE	DT	DPTH FACT	% COND	TOT ADJ	UNIT PRICE	ADJ UNIT PRICE	LAND VALUE	OTHER ADJUSTMENTS AND NOTES	YEAR	DENSITY	DECL	FRZ	YR	CONSRV

REVIEW DATE 04/11/2018 BY DJX Total Acres: 0.00 Total Land Value: 150,000 Market: 0 Agricultural: 0 Common: 150,000 PRINTED 08/02/2023 BY SYS