BLOCK 20 LOT 11
AMELIA PARK PHASE 2 UNIT 8
PB 6/391

MARKOWSKI KAREN O & PAUL A
1775 NEIGHBOR STREET
FERNANDINA BEACH, FL 32034

**2023**

**00-00-31-102P-0020-0110**

## BUILDING CHARACTERISTICS

| ELEMENT | CD | CONSTRUCTION |
|---|---|---|
| Exterior Wall | 10 | ABOVE AVG 100 |
| Roof Structur | 08 | IRREGULAR 100 |
| Roof Cover | 03 | COMP SHNGL 100 |
| Interior Wall | 05 | DRYWALL 100 |
| Interior Floo | 15 | HARDTILE 70 |
| Interior Floo | 14 | CARPET 30 |
| Air Condition | 03 | CENTRAL 100 |
| Heating Type | 04 | AIR DUCTED 100 |
| Bedrooms | | 3 100 |
| Bathrooms | | 2.5 100 |
| Frame | 02 | WOOD FRAME 100 |
| Stories | 1. | 1. 100 |
| Units | | 0 100 |
| Occupancy | 00 | NONE 100 |
| Quality | 05 | Quality Level 05 |
| DOR CODE | 0100 | SINGLE FAMILY |
| MAP NUM | | MKT AREA 01 |
| NEIGHBORHOOD/LOC | 1031.00 | |

| AREA TYPE | TOTAL GROSS AREA | PCT OF BASE | TOT ADJ AREA | SUBAREA MARKET VALUE |
|---|---|---|---|---|
| BAS | 2,312 | 100 | 2,312 | 381,208 |
| FDG | 420 | 60 | 252 | 41,550 |
| FOP | 8 | 30 | 2 | 329 |
| FOP | 86 | 30 | 26 | 4,287 |
| FOP | 168 | 30 | 50 | 8,244 |
| FOP | 174 | 30 | 52 | 8,573 |
| PTO | 60 | 5 | 3 | 495 |
| TOTALS | 3,228 | | 2,697 | 444,688 |

## MARKET ADJUSTMENTS

| TYPE | MDL | EFF. AREA | TOT ADJ PTS | EFF. BASE RATE | REPL. COST NEW | AYB | EYB | ECON | FNCT | | NORM | % COND |
|---|---|---|---|---|---|---|---|---|---|---|---|---|
| 0500 | 01 | 2,697 | 125.7696 | 179.22 | 483,356 | 2005 | 2005 | 0 | 0 | 0 | 8.00 | 92.00 |

1 SFR CUST – 0% - 2023 Heated Area: 2312 HX Base Yr

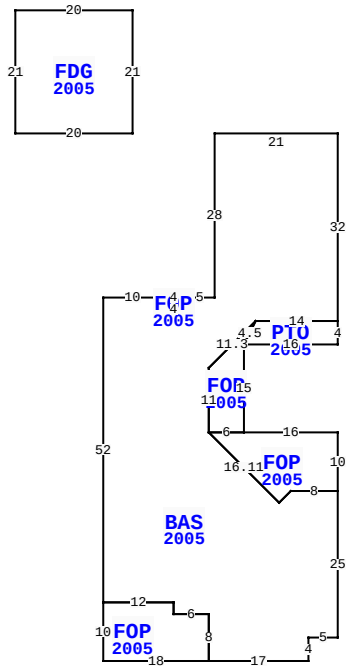


1775 NEIGHBOR ST, FERNANDINA BEACH

| | | | |
|---|---|---|---|
| BLD DATE | | LGL DATE | |
| XF DATE | | LAND DATE | |
| INC DATE | | AG DATE | |

## NASSAU COUNTY PROPERTY

PAGE 1 of 1 2

### VALUATION SUMMARY

| | |
|---|---|
| VALUATION BY | STANDARD |
| Tax Group: 2 | Tax Dist: |
| BUILDING MARKET VALUE | 444,688 |
| TOTAL MARKET OB/XF VALUE | 11,991 |
| TOTAL LAND VALUE - MARKET | 180,000 |
| TOTAL MARKET VALUE | 636,679 |
| SOH/AGL Deduction | 0 |
| ASSESSED VALUE | 636,679 |
| TOTAL EXEMPTION VALUE | 0 |
| BASE TAXABLE VALUE | 636,679 |
| TOTAL JUST VALUE | 636,679 |
| NCON VALUE | 456,679 |
| INCOME VALUE | |
| PREVIOUS YEAR MKT VALUE | 598,126 |

| PERMIT NUM | DESCRIPTION | AMT | ISSUED |
|---|---|---|---|
| 20052574 | XFOB | 6,000 | 08/30/2005 |
| 20052503 | GAS | 1,000 | 08/23/2005 |
| Q0051779 | H/AC | 7,000 | 05/12/2005 |
| 20051365 | NEW CONSTR | 1,000 | 03/07/2005 |
| 20051257 | NEW CONSTR | 2,000 | 02/16/2005 |
| 20051174 | NEW CONSTR | 172,000 | 02/03/2005 |

## SALES DATA

| OFF RECORD Number | DATE | TYPE INST | Q U | V I | RSN CD | SALE PRICE |
|---|---|---|---|---|---|---|
| 2625/1586 | 3/15/2023 | WD | Q | I | 02 | 780,000 |
| GRANTOR: LOTZ KARELYN H | | | | | | |
| GRANTEE: MARKOWSKI KAREN O & | | | | | | |
| 1279/1557 | 12/09/2004 | WD | Q | V | | 77,900 |
| GRANTOR: BRYLEN HOMES LTD | | | | | | |
| GRANTEE: LOTZ KARELYN H & WI | | | | | | |

## BUILDING NOTES

## BUILDING DIMENSIONS

BAS=[YR=2005] W21 S28 W5 FOP=[YR=2005] W4 S2 E4 N2$S2 W4 N2 W10 S52 FOP=[YR=2005] S10 E18 N8 W6 N2 W12$ E12 S2 E6 S8 E17 N4 E5 N25 FOP=[YR=2005] N10 W16 FOP=[YR=2005] N15 PTO=[YR=2005] E16N4W14 D4 L2 $ U4 R2 L8 D8 S11E6$W6 D12 R12 U2 R2 E8 $ W8 D2 L2 L12 U12 N11 U8 R8 E14 N32$ PTR=W35 FDG=[YR=2005] N21 W20 S21 E20$E35$.

## EXTRA FEATURES

| LN | OB/XF CODE | DESCRIPTION | BLD | CAP | L | W | UNITS | UT | Adj R | ADJ UNIT PRICE | ORIG COND | YEAR ON | YEAR ACTUAL | Q | % COND | OB/XF MKT VALUE | NOTES |
|---|---|---|---|---|---|---|---|---|---|---|---|---|---|---|---|---|---|
| 1 | 0500 | FP-PRE FAB | 0 | 0 | 0 | 0 | 1.00 | UT | 3,500.00 | 3,500.00 | 100 | 2005 | 2005 | 3 | 90 | 3,150 | |
| 2 | 0810 | CONCRETE A | 0 | 0 | 0 | 0 | 1,035.00 | SF | 6.50 | 6.50 | 100 | 2005 | 2005 | 3 | 87 | 5,853 | |
| 3 | 0825 | BRICK | 0 | 0 | 3 | 6 | 18.00 | SF | 25.00 | 25.00 | 100 | 2005 | 2005 | 3 | 96 | 432 | |
| 4 | 0910 | SCRN RM L | 0 | 0 | 17 | 20 | 340.00 | SF | 15.00 | 15.00 | 100 | 2005 | 2005 | 3 | 27 | 1,377 | |
| 5 | 0476 | VF 6 SBPL | 0 | 0 | 0 | 0 | 44.00 | LF | 32.00 | 32.00 | 100 | 2005 | 2005 | 3 | 69 | 972 | |
| 6 | 0470 | VNYL GATE | 0 | 0 | 0 | 0 | 1.00 | UT | 300.00 | 300.00 | 100 | 2005 | 2005 | 3 | 69 | 207 | |

## LAND DESCRIPTION

TOTAL OB/XF 11,991

| LN | USE CODE | CLS | LAND USE DESCRIPTION | CAP | RD | LOC ZONE | FRONT | DEPTH | TOT LND UTS | UNIT TYPE | DT | DPTH FACT | % COND | TOT ADJ | UNIT PRICE | ADJ UNIT PRICE | LAND VALUE | OTHER ADJUSTMENTS AND NOTES | YEAR | DENSITY | DECL | FRZ | YR | CONSRV |
|---|---|---|---|---|---|---|---|---|---|---|---|---|---|---|---|---|---|---|---|---|---|---|---|---|
| 1 | 000100 | C | SFR | 0 | | PUD | 0.00 | 0.00 | 60.00 | FF | | 1.00 | 1.00 | 1.00 | 3,000.00 | 3,000.00 | 180,000 | | | | | | | |

REVIEW DATE 04/11/2018 BY DJX Total Acres: 0.00 Total Land Value: 180,000 Market: 0 Agricultural: 0 Common: 180,000 PRINTED 08/02/2023 BY SYS