BLOCK 20 LOT 7
AMELIA PARK PHASE 2 UNIT 8
PB 6/391

CONRAD FAMILY TRUST/CONRAD ROGER J TRUSTEE
1853 NEIGHBOR ST
FERNANDINA BEACH, FL 32034

**2023**

**00-00-31-102P-0020-0070**

## NASSAU COUNTY PROPERTY



### BUILDING CHARACTERISTICS

| ELEMENT | CD | CONSTRUCTION |
|---|---|---|
| Exterior Wall | 14 | WD SHINGLE 100 |
| Roof Structur | 08 | IRREGULAR 100 |
| Roof Cover | 03 | COMP SHNGL 100 |
| Interior Wall | 05 | DRYWALL 100 |
| Interior Floo | 15 | HARDTILE 70 |
| Interior Floo | 14 | CARPET 30 |
| Air Condition | 03 | CENTRAL 100 |
| Heating Type | 04 | AIR DUCTED 100 |
| Bedrooms | | 3 100 |
| Bathrooms | | 2.5 100 |
| Frame | 02 | WOOD FRAME 100 |
| Stories | 1. | 1. 100 |
| Units | | 0 100 |
| Occupancy | 00 | NONE 100 |
| Quality | 05 | Quality Level 05 |
| DOR CODE | 0100 | SINGLE FAMILY |
| MAP NUM | | MKT AREA 01 |
| NEIGHBORHOOD/LOC | 1031.00 | |

| AREA TYPE | TOTAL GROSS AREA | PCT OF BASE | TOT ADJ AREA | SUBAREA MARKET VALUE |
|---|---|---|---|---|
| BAS | 2,357 | 100 | 2,357 | 391,903 |
| FDG | 462 | 60 | 277 | 46,057 |
| FOP | 48 | 30 | 14 | 2,328 |
| FOP | 84 | 30 | 25 | 4,157 |
| FOP | 174 | 30 | 52 | 8,646 |
| FOP | 288 | 30 | 86 | 14,300 |
| PTO | 60 | 5 | 3 | 499 |
| PTO | 256 | 5 | 13 | 2,161 |
| TOTALS | 3,729 | | 2,827 | 470,050 |

### MARKET ADJUSTMENTS

| TYPE | MDL | EFF. AREA | TOT ADJ PTS | EFF. BASE RATE | REPL. COST NEW | AYB | EYB | ECON | FNCT | | NORM | % COND |
|---|---|---|---|---|---|---|---|---|---|---|---|---|
| 0500 | 01 | 2,827 | 126.8256 | 180.73 | 510,924 | 2006 | 2006 | 0 | 0 | 0 | 8.00 | 92.00 |

1 SFR CUST – 100% - 2021 Heated Area: 2357 HX Base Yr 2021

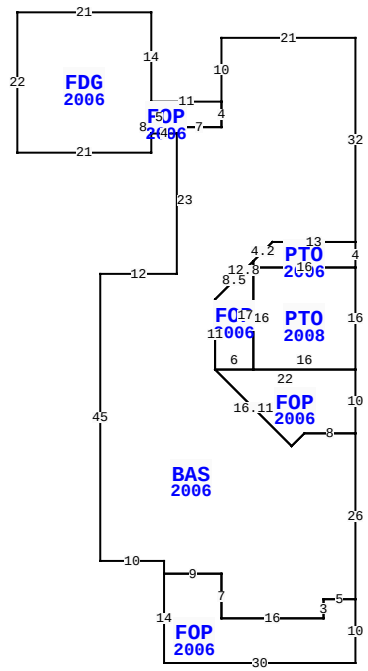


1853 NEIGHBOR ST, FERNANDINA BEACH

| | | | |
|---|---|---|---|
| BLD DATE | | LGL DATE | |
| XF DATE | | LAND DATE | |
| INC DATE | | AG DATE | |

### VALUATION SUMMARY

| | | |
|---|---|---|
| VALUATION BY | | STANDARD |
| Tax Group: 2 | Tax Dist: | |
| BUILDING MARKET VALUE | | 470,050 |
| TOTAL MARKET OB/XF VALUE | | 11,072 |
| TOTAL LAND VALUE - MARKET | | 180,000 |
| TOTAL MARKET VALUE | | 661,122 |
| SOH/AGL Deduction | | 91,155 |
| ASSESSED VALUE | | 569,967 |
| TOTAL EXEMPTION VALUE | HX HB | 50,000 |
| BASE TAXABLE VALUE | | 519,967 |
| TOTAL JUST VALUE | | 661,122 |
| NCON VALUE | | 0 |
| INCOME VALUE | | |
| PREVIOUS YEAR MKT VALUE | | 620,071 |

| PERMIT NUM | DESCRIPTION | AMT | ISSUED |
|---|---|---|---|
| 20072242 | XFOB | 4,450 | 12/17/2007 |
| 20062604 | OTHER | 1,000 | 11/28/2006 |
| 20061898 | H/AC | 8,880 | 08/10/2006 |
| 20061841 | NEW CONSTR | 10,000 | 08/02/2006 |
| 20061635 | GAS | 1,000 | 07/11/2006 |
| 20061104 | NEW CONSTR | 6,749 | 05/18/2006 |

### SALES DATA

| OFF RECORD Number | DATE | TYPE INST | Q U | V I | RSN CD | SALE PRICE |
|---|---|---|---|---|---|---|
| 2346/0809 | 3/12/2020 | WD | Q | I | 01 | 605,000 |
| GRANTOR: JERVIS WALTER T & HAW | | | | | | |
| GRANTEE: CONRAD FAMILY TRUST | | | | | | |
| 1960/0223 | 1/27/2015 | WD | Q | I | 01 | 484,900 |
| GRANTOR: GARBER VAN L & ANN S | | | | | | |
| GRANTEE: JERVIS WALTER T & H | | | | | | |

### BUILDING NOTES

### BUILDING DIMENSIONS

BAS=[YR=2006] W21S10 FOP=[YR=2006] W11 FDG=[YR=2006] N14W21S22E21N8$S5E4N1 E7N4$ S4W7S23W12S45E10S2 FOP=[YR=2006] S14E30N10W5S3W16N7W9$ E9S7E16N3E5N26 FOP=[YR=2006] N10 PTO=[YR=2008] N16 PTO=[YR=2006] N4W13 D3 L3 FOP=[YR=2006] D6 L6 S11 E6N17 $ S1 E16$W16S16E16$ W22 D12 R12 U2 R2 E8$ W8 D2 L2 U12 L12 N11 U9 R9 E13N32$.

### EXTRA FEATURES

| LN | OB/XF CODE | DESCRIPTION | BLD | CAP | L | W | UNITS | UT | Adj R | ADJ UNIT PRICE | ORIG COND | YEAR ON | YEAR ACTUAL | Q | % COND | OB/XF MKT VALUE | NOTES |
|---|---|---|---|---|---|---|---|---|---|---|---|---|---|---|---|---|---|
| 1 | 0500 | FP-PRE FAB | 0 | 100 | 0 | 0 | 1.00 | UT | 3,500.00 | 3,500.00 | 100 | 2006 | 2006 | 3 | 91 | 3,185 | |
| 2 | 0810 | CONCRETE A | 0 | 100 | 0 | 0 | 970.00 | SF | 6.50 | 6.50 | 100 | 2006 | 2006 | 3 | 88 | 5,548 | |
| 3 | 0819 | CONC 12" | 0 | 100 | 3 | 3 | 9.00 | SF | 9.50 | 9.50 | 100 | 2006 | 2006 | 3 | 88 | 75 | |
| 4 | 0825 | BRICK | 0 | 100 | 10 | 6 | 60.00 | SF | 12.50 | 12.50 | 100 | 2006 | 2006 | 3 | 97 | 728 | |
| 5 | 0910 | SCRN RM L | 0 | 100 | 16 | 16 | 256.00 | SF | 15.00 | 15.00 | 100 | 2008 | 2008 | 3 | 40 | 1,536 | |

### LAND DESCRIPTION

TOTAL OB/XF 11,072

| LN | USE CODE | CLS | LAND USE DESCRIPTION | CAP | RD | LOC ZONE | FRONT | DEPTH | TOT LND UTS | UNIT TYPE | DT | DPTH FACT | % COND | TOT ADJ | UNIT PRICE | ADJ UNIT PRICE | LAND VALUE | OTHER ADJUSTMENTS AND NOTES | YEAR | DENSITY | DECL | FRZ | YR | CONSRV |
|---|---|---|---|---|---|---|---|---|---|---|---|---|---|---|---|---|---|---|---|---|---|---|---|---|
| 1 | 000100 | C | SFR | 100 | | PUD | 0.00 | 0.00 | 60.00 | FF | | 1.00 | 1.00 | 1.00 | 3,000.00 | 3,000.00 | 180,000 | | | | | | | |

REVIEW DATE 04/11/2018 BY DJX Total Acres: 0.00 Total Land Value: 180,000 Market: 0 Agricultural: 0 Common: 180,000 PRINTED 08/02/2023 BY SYS