BLOCK 18 LOT 7
AMELIA PARK PHASE 1 UNIT 7
PB 6/366

FANCIULLO SUSAN
1909 PERIMETER PARK RD W
FERNANDINA BEACH, FL 32034

2023

00-00-31-102P-0018-0070

BUILDING CHARACTERISTICS

ELEMENT	CD	CONSTRUCTION
Exterior Wall	10	ABOVE AVG 100
Roof Structur	03	GABLE/HIP 100
Roof Cover	03	COMP SHNGL 100
Interior Wall	05	DRYWALL 100
Interior Floo	11	CLAY TILE 70
Interior Floo	14	CARPET 30
Air Condition	03	CENTRAL 100
Heating Type	04	AIR DUCTED 100
Bedrooms		3 100
Bathrooms		3.5 100
Frame	02	WOOD FRAME 100
Stories	1.5	1.5 100
Units		0 100
Occupancy	00	NONE 100
Quality	06	Quality Level 06

DOR CODE 0100 SINGLE FAMILY
MAP NUM | MKT AREA 01
NEIGHBORHOOD/LOC 1031.00

AREA TYPE	TOTAL GROSS AREA	PCT OF BASE	TOT ADJ AREA	SUBAREA MARKET VALUE
BAS	1,780	100	1,780	324,926
FGR	576	55	317	57,866
FOP	138	30	41	7,484
FOP	270	30	81	14,786
FUS	725	100	725	132,344
STP	16	10	2	365
TOTALS	3,505		2,946	537,771

MARKET ADJUSTMENTS

TYPE	MDL	EFF. AREA	TOT ADJ PTS	EFF. BASE RATE	REPL. COST NEW	AYB	EYB	ECON	FNCT		NORM	% COND
0500	01	2,946	128.7471	183.46	540,473	2020	2020	0	0	0	0.50	99.50

1 SFR CUST – 100% - 2021 Heated Area: 2505 HX Base Yr 2021

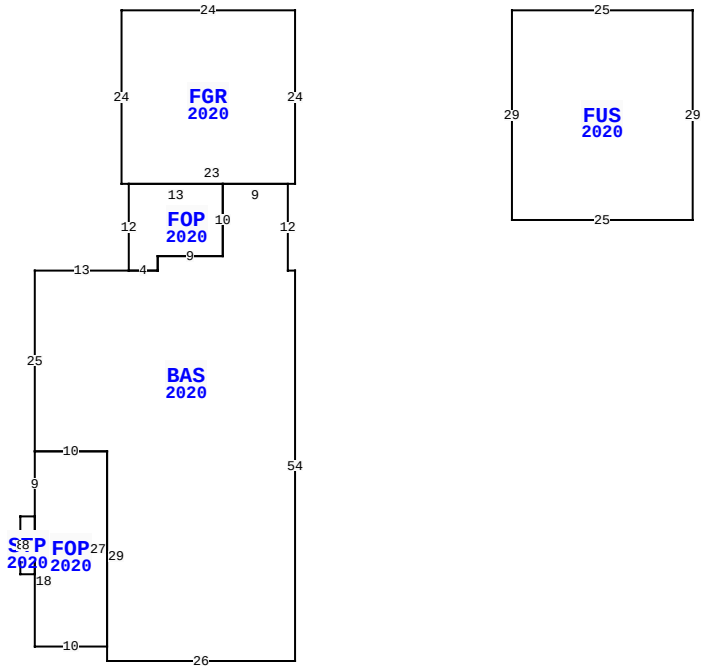

1909 W PERIMETER PARK RD, FERNANDINA BEACH

BLD DATE		LGL DATE	
XF DATE		LAND DATE	
INC DATE		AG DATE	

NASSAU COUNTY PROPERTY

PAGE 1 of 1 2

VALUATION SUMMARY

VALUATION BY		STANDARD
Tax Group: 2	Tax Dist:	
BUILDING MARKET VALUE		537,771
TOTAL MARKET OB/XF VALUE		8,059
TOTAL LAND VALUE - MARKET		156,000
TOTAL MARKET VALUE		701,830
SOH/AGL Deduction		99,774
ASSESSED VALUE		602,056
TOTAL EXEMPTION VALUE	HX HB	50,000
BASE TAXABLE VALUE		552,056
TOTAL JUST VALUE		701,830
NCON VALUE		0
INCOME VALUE		
PREVIOUS YEAR MKT VALUE		658,292

PERMIT NUM	DESCRIPTION	AMT	ISSUED
20190237	NEW CONSTR	0	05/30/2019
20190238	GARAGE	0	05/30/2019

SALES DATA

OFF RECORD Number	DATE	TYPE INST	Q U	V I	RSN CD	SALE PRICE
2371/1968	6/25/2020	WD	Q	I	02	705,000
GRANTOR: SEAVIEW CUSTOM HOMES						
GRANTEE: FANCIULLO SUSAN						
2233/1931	10/31/2018	WD	Q	I	01	150,000
GRANTOR: MURDOCK RICHARD B & J						
GRANTEE: SEAVIEW CUSTOM HOME						

BUILDING NOTES

BUILDING DIMENSIONS

FGR=[YR=2020] W24 S24 E1 FOP=[YR=2020] S12 BAS=[YR=2020] W13 S25 FOP=[YR=2020] S9 STP=[YR=2020] W2 S8 E2 N8 $ S18 E10 N27 W10 $ E10 S29 E26 N54 W1 N12 W9 S10 W9 S2 W4 $ E4 N2 E9 N10 W13 $ E23 N24 $ PTR= E30 FUS=[YR=2020] E25 S29 W25 N29 $ W30 $.

EXTRA FEATURES

LN	OB/XF CODE	DESCRIPTION	BLD	CAP	L	W	UNITS	UT	Adj R	ADJ UNIT PRICE	ORIG COND	YEAR ON	YEAR ACTUAL	Q	% COND	OB/XF MKT VALUE	NOTES
1	0855	CONC PAVER	0	100	0	0	814.00	SF	10.00	10.00	100	2020	2020	3	99	8,059	

LAND DESCRIPTION

TOTAL OB/XF 8,059

LN	USE CODE	CLS	LAND USE DESCRIPTION	CAP	RD	LOC ZONE	FRONT	DEPTH	TOT LND UTS	UNIT TYPE	DT	DPTH FACT	% COND	TOT ADJ	UNIT PRICE	ADJ UNIT PRICE	LAND VALUE	OTHER ADJUSTMENTS AND NOTES	YEAR	DENSITY	DECL	FRZ	YR	CONSRV
1	000100	C	SFR	100		PUD	0.00	0.00	52.00	FF		1.00	1.00	1.00	3,000.00	3,000.00	156,000							

REVIEW DATE 10/12/2020 BY RK Total Acres: 0.00 Total Land Value: 156,000 Market: 0 Agricultural: 0 Common: 156,000 PRINTED 08/02/2023 BY SYS