BLOCK 14 LOT 6
AMELIA PARK PHASE 1 UNIT 6
PB 6/313-314

ONKS GREGORY & SHERRI
1505 LAKE PARK DRIVE
FERNANDINA BEACH, FL 32034

2023

00-00-31-102P-0014-0060

BUILDING CHARACTERISTICS

ELEMENT	CD	CONSTRUCTION
Exterior Wall	10	ABOVE AVG 100
Roof Structur	08	IRREGULAR 100
Roof Cover	03	COMP SHNGL 100
Interior Wall	05	DRYWALL 100
Interior Floo	12	HARDWOOD 60
Interior Floo	14	CARPET 40
Air Condition	03	CENTRAL 100
Heating Type	04	AIR DUCTED 100
Bedrooms		3 100
Bathrooms		3.5 100
Frame	02	WOOD FRAME 100
Stories	1.5	1.5 100
Units		0 100
Occupancy	00	NONE 100
Quality	05	Quality Level 05
DOR CODE	0100	SINGLE FAMILY
MAP NUM		MKT AREA 01
NEIGHBORHOOD/LOC	1031.00	

AREA TYPE	TOTAL GROSS AREA	PCT OF BASE	TOT ADJ AREA	SUBAREA MARKET VALUE
BAS	1,456	100	1,456	233,826
FDG	441	60	265	42,557
FOP	224	30	67	10,760
FUS	704	100	704	113,059
PTO	60	5	3	482
UOP	168	20	34	5,460
TOTALS	3,053		2,529	406,145

MARKET ADJUSTMENTS

TYPE	MDL	EFF. AREA	TOT ADJ PTS	EFF. BASE RATE	REPL. COST NEW	AYB	EYB	ECON	FNCT		NORM	% COND
0500	01	2,529	122.4960	174.56	441,462	2005	2005	0	0	0	8.00	92.00

1 SFR CUST – 100% - 2023 Heated Area: 2160 HX Base Yr 2023

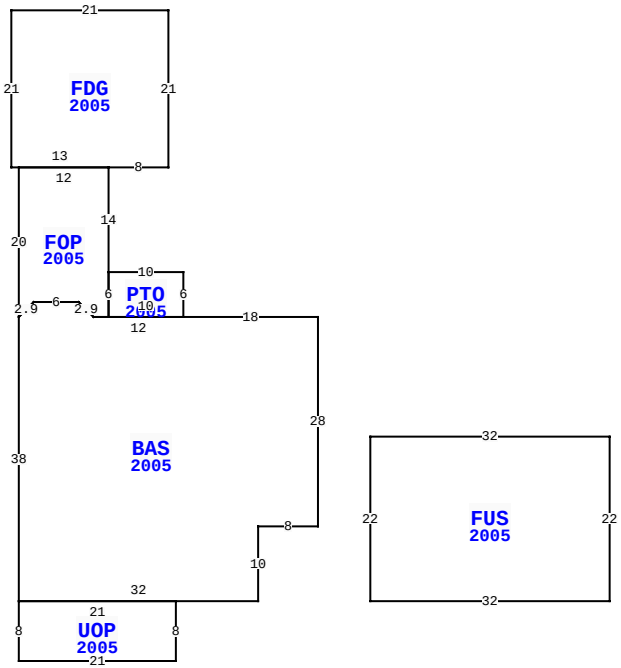

1505 LAKE PARK DR, FERNANDINA BEACH

BLD DATE		LGL DATE	
XF DATE		LAND DATE	
INC DATE		AG DATE	

NASSAU COUNTY PROPERTY

PAGE 1 of 1 2

VALUATION SUMMARY

VALUATION BY		STANDARD
Tax Group: 2	Tax Dist:	
BUILDING MARKET VALUE		406,145
TOTAL MARKET OB/XF VALUE		2,528
TOTAL LAND VALUE - MARKET		150,000
TOTAL MARKET VALUE		558,673
SOH/AGL Deduction		0
ASSESSED VALUE		558,673
TOTAL EXEMPTION VALUE	HX HB	50,000
BASE TAXABLE VALUE		508,673
TOTAL JUST VALUE		558,673
NCON VALUE		0
INCOME VALUE		
PREVIOUS YEAR MKT VALUE		527,190

PERMIT NUM	DESCRIPTION	AMT	ISSUED
20051494	NEW CONSTR	2,000	04/01/2005
20051064	OTHER	7,000	01/18/2005
20042208	NEW CONSTR	151,000	11/23/2004

SALES DATA

OFF RECORD Number	DATE	TYPE INST	Q U	V I	RSN CD	SALE PRICE
2547/0219	3/09/2022	WD	Q	I	02	750,000
GRANTOR: SPICER MICHAEL W &						
GRANTEE: ONKS GREGORY & SHER						
1263/0153	10/01/2004	WD	Q	V		64,500
GRANTOR: BRYLEN HOMES LTD						
GRANTEE: SPICER MICHAEL W &						

BUILDING NOTES

BUILDING DIMENSIONS

BAS=[YR=2005] N10 E8 N28 W18 PTO=[YR=2005] N6W10 FOP=[YR=2005] N14 FDG=[YR=2005] E8 N21 W21S21E13$W12 S20 U2 R2 E6 R2 D2 E2N6$S6E10$ W12 U2 L2 W6 L2 D2 S38 UOP=[YR=2005] S8E21 N8 W21$E32$ PTR=E15 FUS=[YR=2005] N22 E32 S22 W32$ W15$.

EXTRA FEATURES

LN	OB/XF CODE	DESCRIPTION	BLD	CAP	L	W	UNITS	UT	Adj R	ADJ UNIT PRICE	ORIG COND	YEAR ON	YEAR ACTUAL	Q	% COND	OB/XF MKT VALUE	NOTES
1	0810	CONCRETE A	0	100	21	17	357.00	SF	6.50	6.50	100	2005	2005	3	87	2,019	
2	0810	CONCRETE A	0	100	18	5	90.00	SF	6.50	6.50	100	2005	2005	3	87	509	

LAND DESCRIPTION

TOTAL OB/XF 2,528

LN	USE CODE	CLS	LAND USE DESCRIPTION	CAP	RD	LOC ZONE	FRONT	DEPTH	TOT LND UTS	UNIT TYPE	DT	DPTH FACT	% COND	TOT ADJ	UNIT PRICE	ADJ UNIT PRICE	LAND VALUE	OTHER ADJUSTMENTS AND NOTES	YEAR	DENSITY	DECL	FRZ	YR	CONSRV
1	000100	C	SFR	100		PUD	0.00	0.00	50.00	FF		1.00	1.00	1.00	3,000.00	3,000.00	150,000							

REVIEW DATE 04/05/2018 BY DJX Total Acres: 0.00 Total Land Value: 150,000 Market: 0 Agricultural: 0 Common: 150,000 PRINTED 08/02/2023 BY SYS