BLOCK 10 LOT 2A
AMELIA PARK PHASE 1 UNIT 2
PB 6/171

GLAZER MICHELE D
1576 PARK LN
FERNANDINA BEACH, FL 32034

2023

00-00-31-102P-0010-02A0

BUILDING CHARACTERISTICS

ELEMENT	CD	CONSTRUCTION
Exterior Wall	16	WD FR STUC 100
Roof Structur	03	GABLE/HIP 100
Roof Cover	03	COMP SHNGL 100
Interior Wall	05	DRYWALL 100
Interior Floo	12	HARDWOOD 70
Interior Floo	19	MARBLE 30
Air Condition	03	CENTRAL 100
Heating Type	04	AIR DUCTED 100
Bedrooms		3 100
Bathrooms		2.5 100
Frame	02	WOOD FRAME 100
Stories	1.5	1.5 100
Units		0 100
Quality	06	Quality Level 06
DOR CODE	0100	SINGLE FAMILY
MAP NUM		MKT AREA 01
NEIGHBORHOOD/LOC	1031.00	

AREA TYPE	TOTAL GROSS AREA	PCT OF BASE	TOT ADJ AREA	SUBAREA MARKET VALUE
BAS	1,253	100	1,253	272,458
FDG	420	60	252	54,796
FEP	129	80	103	22,397
FOP	132	30	40	8,698
FOP	132	30	40	8,698
FOP	138	30	41	8,915
FUS	717	100	717	155,908
TOTALS	2,921		2,446	531,870

MARKET ADJUSTMENTS

TYPE	MDL	EFF. AREA	TOT ADJ PTS	EFF. BASE RATE	REPL. COST NEW	AYB	EYB	ECON	FNCT		NORM	% COND
0320	12	2,446	251.5268	238.95	584,472	2004	2004	0	0	0	9.00	91.00

1 TOWNHOUSE – 100% - 2022 Heated Area: 1970 HX Base Yr 2022

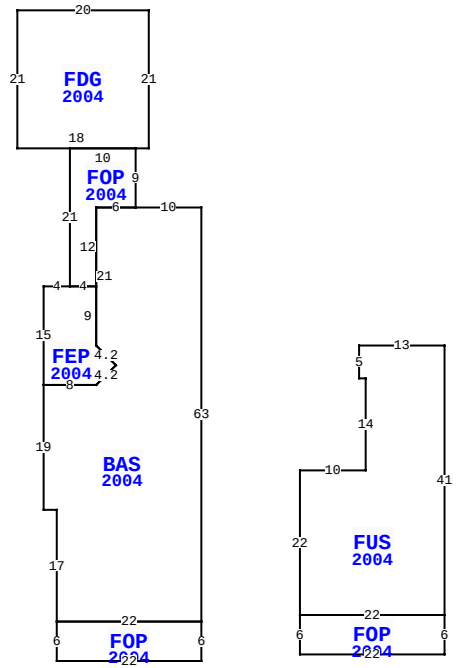

1576 PARK LN, FERNANDINA BEACH

BLD DATE		LGL DATE	
XF DATE		LAND DATE	
INC DATE		AG DATE	

NASSAU COUNTY PROPERTY

PAGE 1 of 1 2

VALUATION SUMMARY

VALUATION BY		STANDARD
Tax Group: 2	Tax Dist:	
BUILDING MARKET VALUE		531,870
TOTAL MARKET OB/XF VALUE		9,102
TOTAL LAND VALUE - MARKET		96,000
TOTAL MARKET VALUE		636,972
SOH/AGL Deduction		109,864
ASSESSED VALUE		527,108
TOTAL EXEMPTION VALUE	HX HB	50,000
BASE TAXABLE VALUE		477,108
TOTAL JUST VALUE		636,972
NCON VALUE		0
INCOME VALUE		
PREVIOUS YEAR MKT VALUE		511,755

PERMIT NUM	DESCRIPTION	AMT	ISSUED
20033468	NEW CONSTR	170,000	07/11/2003

SALES DATA

OFF RECORD Number	DATE	TYPE INST	Q U	V I	RSN CD	SALE PRICE
2440/1779	3/09/2021	WD	Q	I	02	462,000
GRANTOR: NEWMAN WILLIAM A & BE						
GRANTEE: GLAZER MICHELE D						
2266/0518	4/04/2019	WD	Q	I	01	440,000
GRANTOR: CINQUINA RICHARD G &						
GRANTEE: NEWMAN WILLIAM A &						

BUILDING NOTES

BUILDING DIMENSIONS

BAS=[YR=2004] W10 FOP=[YR=2004] N9 FDG=[YR=2004] E2 N21 W20 S21 E18$ W10 S21 FEP=[YR=2004] W4 S15 E8 U3 R3 U3 L3 N9 W4$ E4 N12 E6$ W6 S21 R3 D3 D3 L3 W8 S19 E2 S17 FOP=[YR=2004] S6 E22 N6 W22$ E22 N63$ PTR= E15S40 FUS=[YR=2004] E10 N14 W1 N5 E13 S41 FOP=[YR=2004] S6 W22 N6 E22$W22N22 $N40W15$.

EXTRA FEATURES

LN	OB/XF CODE	DESCRIPTION	BLD	CAP	L	W	UNITS	UT	Adj R	ADJ UNIT PRICE	ORIG COND	YEAR ON	YEAR ACTUAL	Q	% COND	OB/XF MKT VALUE	NOTES
1	0500	FP-PRE FAB	0	100	0	0	1.00	UT	3,500.00	3,500.00	100	2004	2004	3	89	3,115	
2	0810	CONCRETE A	0	100	7	3	21.00	SF	6.50	6.50	100	2004	2004	3	86	117	
3	0810	CONCRETE A	0	100	17	16	272.00	SF	6.50	6.50	100	2004	2004	3	86	1,520	
4	0855	CONC PAVER	0	100	38	3	114.00	SF	10.00	10.00	100	2004	2004	3	86	980	
5	0855	CONC PAVER	0	100	0	0	286.00	SF	10.00	10.00	100	2004	2004	3	86	2,460	
6	0478	VF 6 SLAT	0	100	0	0	57.00	LF	7.50	7.50	100	2002	2002	3	61	261	
7	0476	VF 6 SBPL	0	100	0	0	12.00	LF	32.00	32.00	100	2004	2004	3	66	253	
8	0470	VNYL GATE	0	100	0	0	2.00	UT	300.00	300.00	100	2004	2004	3	66	396	

LAND DESCRIPTION

TOTAL OB/XF 9,102

LN	USE CODE	CLS	LAND USE DESCRIPTION	CAP	RD	LOC ZONE	FRONT	DEPTH	TOT LND UTS	UNIT TYPE	DT	DPTH FACT	% COND	TOT ADJ	UNIT PRICE	ADJ UNIT PRICE	LAND VALUE	OTHER ADJUSTMENTS AND NOTES	YEAR	DENSITY	DECL	FRZ	YR	CONSRV
1	000100	C	SFR	100		PUD	0.00	0.00	32.00	FF		1.00	1.00	1.00	3,000.00	3,000.00	96,000							

REVIEW DATE 04/02/2018 BY DJX Total Acres: 0.00 Total Land Value: 96,000 Market: 0 Agricultural: 0 Common: 96,000 PRINTED 08/02/2023 BY SYS