BLOCK 6 LOT 9A
IN OR 2329/212
AMELIA PARK PHASE 1 UNIT 1

CASTOR DRU ELLEN
1886 CARNATION ST
FERNANDINA BEACH, FL 32034

2023

00-00-31-102P-0006-09A0

BUILDING CHARACTERISTICS

ELEMENT	CD	CONSTRUCTION
Exterior Wall	16	WD FR STUC 100
Roof Structur	03	GABLE/HIP 100
Roof Cover	03	COMP SHNGL 100
Interior Wall	05	DRYWALL 100
Interior Floo	14	CARPET 70
Interior Floo	11	CLAY TILE 30
Air Condition	03	CENTRAL 100
Heating Type	04	AIR DUCTED 100
Bedrooms		4 100
Bathrooms		3.5 100
Frame	02	WOOD FRAME 100
Stories	1.5	1.5 100
Units		0 100
Quality	06	Quality Level 06
DOR CODE	0100	SINGLE FAMILY
MAP NUM		MKT AREA 01
NEIGHBORHOOD/LOC	1031.00	

AREA TYPE	TOTAL GROSS AREA	PCT OF BASE	TOT ADJ AREA	SUBAREA MARKET VALUE
APT	444	100	444	84,888
FEP	56	80	45	8,604
HXB	717	100	717	137,083
HXB	1,243	100	1,243	237,649
HXG	420	55	231	44,164
HXP	84	30	25	4,780
HXP	144	30	43	8,221
HXU	56	55	31	5,927
TOTALS	3,164		2,779	531,317

MARKET ADJUSTMENTS

TYPE	MDL	EFF. AREA	TOT ADJ PTS	EFF. BASE RATE	REPL. COST NEW	AYB	EYB	ECON	FNCT		NORM	% COND
0320	12	2,779	226.1232	214.82	596,985	2000	2000	0	0	0	11.00	89.00

1 TOWNHOUSE - 82.4% - 2020 Heated Area: 2404 HX Base Yr 2020

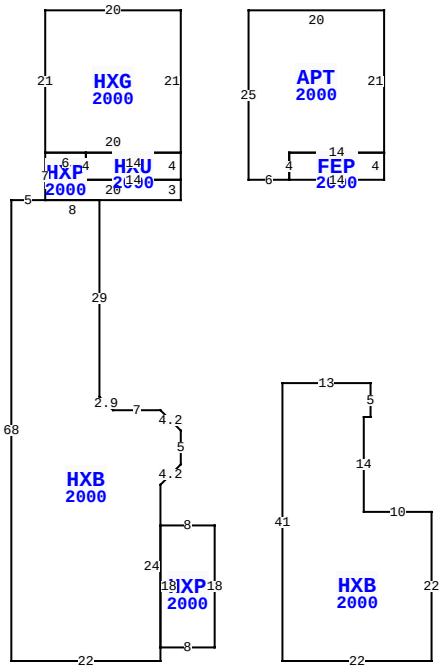

1886 CARNATION ST, FERNANDINA BEACH

BLD DATE		LGL DATE	
XF DATE		LAND DATE	
INC DATE		AG DATE	

NASSAU COUNTY PROPERTY

PAGE 1 of 1 2

VALUATION SUMMARY

VALUATION BY		STANDARD
Tax Group: 2	Tax Dist:	
BUILDING MARKET VALUE		531,317
TOTAL MARKET OB/XF VALUE		7,148
TOTAL LAND VALUE - MARKET		114,000
TOTAL MARKET VALUE		652,465
SOH/AGL Deduction		221,746
ASSESSED VALUE		430,719
TOTAL EXEMPTION VALUE	HX HB	50,000
BASE TAXABLE VALUE		380,719
TOTAL JUST VALUE		652,465
NCON VALUE		0
INCOME VALUE		
PREVIOUS YEAR MKT VALUE		527,789

PERMIT NUM	DESCRIPTION	AMT	ISSUED
20091168	H/AC	4,500	08/31/2009
990960	NEW CONSTR	152,138	08/02/1999
990961	NEW CONSTR	28,709	08/02/1999

SALES DATA

OFF RECORD Number	DATE	TYPE INST	Q U	V I	RSN CD	SALE PRICE
2329/0212	12/30/2019	QC	U	I	11	100
GRANTOR: HAGEMANN GLEN ANN						
GRANTEE: CASTOR DRU ELLEN						
2328/0636	12/30/2019	QC	U	I	11	150,000
GRANTOR: HAGEMANN GLEN ANN						
GRANTEE: CASTOR DRU ELLEN						

BUILDING NOTES

BUILDING DIMENSIONS

HXG=[YR=2000] W20 S21 HXP=[YR=2000] S7 HXB=[YR=2000] W5 S68 E22 N2 HXP=[YR=2000] E8 N18 W8 S18 $ N24 R3 U3 N5 U3 L3 W7 U2 L2 N29 W8 $ E20 N3 HXU=[YR=2000] N4 W14 S4 E14 $ W14 N4 W6 $ E20 N21 $ PTR= E15S55 HXB=[YR=2000] E13 S5 W1 S14 E10 S22 W22 N41 $ W15N55 $ PTR= E30S25 FEP=[YR=2000] N4 APT=[YR=2000] N21 W20 S25 E6 N4 E14 $ W14 S4E14$ N25W30 $.

EXTRA FEATURES

LN	OB/XF CODE	DESCRIPTION	BLD	CAP	L	W	UNITS	UT	Adj R	ADJ UNIT PRICE	ORIG COND	YEAR ON	YEAR ACTUAL	Q	% COND	OB/XF MKT VALUE	NOTES
1	0500	FP-PRE FAB	0	100	0	0	1.00	UT	3,500.00	3,500.00	100	2000	2000	3	85	2,975	
2	0810	CONCRETE A	0	100	7	8	56.00	SF	6.50	6.50	100	2000	2000	3	80	291	
3	0810	CONCRETE A	0	100	22	5	110.00	SF	6.50	6.50	100	2000	2000	3	80	572	
4	0810	CONCRETE A	0	100	15	16	240.00	SF	6.50	6.50	100	2000	2000	3	80	1,248	
5	0470	VNYL GATE	0	100	0	0	1.00	UT	300.00	300.00	100	2000	2000	3	55	165	
6	0476	VF 6 SBPL	0	100	0	0	62.00	LF	32.00	32.00	100	2000	2000	3	55	1,091	
7	0810	CONCRETE A	0	100	31	5	155.00	SF	6.50	6.50	100	2000	2000	3	80	806	

LAND DESCRIPTION

TOTAL OB/XF 7,148

LN	USE CODE	CLS	LAND USE DESCRIPTION	CAP	RD	LOC ZONE	FRONT	DEPTH	TOT LND UTS	UNIT TYPE	DT	DPTH FACT	% COND	TOT ADJ	UNIT PRICE	ADJ UNIT PRICE	LAND VALUE	OTHER ADJUSTMENTS AND NOTES	YEAR	DENSITY	DECL	FRZ	YR	CONSRV
1	000100	C	SFR	100		PUD	0.00	0.00	38.00	FF		1.00	1.00	1.00	3,000.00	3,000.00	114,000							

REVIEW DATE 03/22/2018 BY DJX Total Acres: 0.00 Total Land Value: 114,000 Market: 0 Agricultural: 0 Common: 114,000 PRINTED 08/02/2023 BY SYS