BLOCK 5 LOT 1D
IN OR 1980/273
AMELIA PARK PHASE 1 UNIT 1

1637 PARK AVE LLC
2849 EASTWIND DR
FERNANDINA BEACH, FL 32034

2023

00-00-31-102P-0005-01D0

BUILDING CHARACTERISTICS

ELEMENT	CD	CONSTRUCTION
Exterior Wall	16	WD FR STUC 100
Roof Structur	03	GABLE/HIP 100
Roof Cover	03	COMP SHNGL 100
Interior Wall	05	DRYWALL 100
Interior Floo	14	CARPET 90
Interior Floo	11	CLAY TILE 10
Air Condition	03	CENTRAL 100
Heating Type	04	AIR DUCTED 100
Bedrooms		4 100
Bathrooms		3.5 100
Frame	02	WOOD FRAME 100
Stories	2.	2. 100
Units		0 100
Quality	06	Quality Level 06

DOR CODE 0100 SINGLE FAMILY
MAP NUM | MKT AREA 01
NEIGHBORHOOD/LOC 1031.00

AREA TYPE	TOTAL GROSS AREA	PCT OF BASE	TOT ADJ AREA	SUBAREA MARKET VALUE
APT	444	100	444	85,171
FOP	56	30	17	3,261
HXB	606	100	606	116,246
HXB	1,078	100	1,078	206,788
HXG	420	55	231	44,311
HXP	24	30	7	1,343
TOTALS	2,628		2,383	457,119

MARKET ADJUSTMENTS

TYPE	MDL	EFF. AREA	TOT ADJ PTS	EFF. BASE RATE	REPL. COST NEW	AYB	EYB	ECON	FNCT		NORM	% COND
0320	12	2,383	225.6107	214.33	510,748	2001	2001	0	0	0	10.50	89.50

1 TOWNHOUSE - 0% - 0 Heated Area: 2128 HX Base Yr

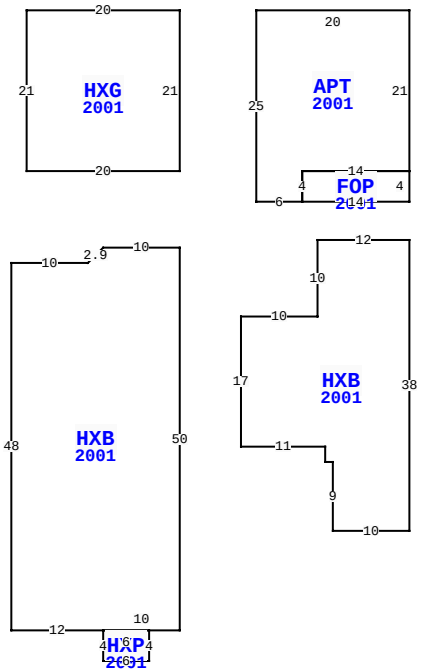

1637 PARK AV, FERNANDINA BEACH

BLD DATE		LGL DATE	
XF DATE		LAND DATE	
INC DATE		AG DATE	

NASSAU COUNTY PROPERTY

PAGE 1 of 1 2

VALUATION SUMMARY

VALUATION BY	STANDARD
Tax Group: 2	Tax Dist:
BUILDING MARKET VALUE	457,119
TOTAL MARKET OB/XF VALUE	3,761
TOTAL LAND VALUE - MARKET	66,000
TOTAL MARKET VALUE	526,880
SOH/AGL Deduction	119,936
ASSESSED VALUE	406,944
TOTAL EXEMPTION VALUE	0
BASE TAXABLE VALUE	406,944
TOTAL JUST VALUE	526,880
NCON VALUE	0
INCOME VALUE	
PREVIOUS YEAR MKT VALUE	421,420

PERMIT NUM	DESCRIPTION	AMT	ISSUED
2003398	NEW CONSTR	130,000	07/03/2000
2003399	NEW CONSTR	27,000	07/03/2000

SALES DATA

OFF RECORD Number	DATE	TYPE INST	Q U	V I	RSN CD	SALE PRICE
1980/0273	5/04/2015	WD	U	I	30	191,300
GRANTOR: WETZEL MATTHEW I						
GRANTEE: 1637 PARK AVE LLC						
1854/0506	4/30/2013	WD	Q	I	02	275,000
GRANTOR: TERRELL ROBERT M III						
GRANTEE: WETZEL MATTHEW I						

BUILDING NOTES

BUILDING DIMENSIONS

HXG=[YR=2001] W20 S21 E20 N21$ PTR= S31 HXB=[YR=2001] W10 D2 L2 W10 S48 E12 HXP=[YR=2001] S4 E6 N4 W6 $ E10 N50 $ N31 $ PTR= E10 APT=[YR=2001] E20 S21 FOP=[YR=2001] S4 W14 N4 E14 $ W14 S4 W6 N25 $ W10 $ PTR= E30 S30 HXB=[YR=2001] S38 W10 N9 W1 N2 W11 N17 E10 N10 E12 $ N30 W30 $.

EXTRA FEATURES

LN	OB/XF CODE	DESCRIPTION	BLD	CAP	L	W	UNITS	UT	Adj R	ADJ UNIT PRICE	ORIG COND	YEAR ON	YEAR ACTUAL	Q	% COND	OB/XF MKT VALUE	NOTES
1	0819	CONC 12"	0	0	2	5	10.00	SF	9.50	9.50	100	2001	2001	3	82	78	
2	0810	CONCRETE A	0	0	8	3	24.00	SF	6.50	6.50	100	2001	2001	3	82	128	
3	0810	CONCRETE A	0	0	21	16	336.00	SF	6.50	6.50	100	2001	2001	3	82	1,791	
4	0810	CONCRETE A	0	0	0	0	232.00	SF	6.50	6.50	100	2001	2001	3	82	1,237	
5	0470	VNYL GATE	0	0	0	0	1.00	UT	300.00	300.00	100	2001	2001	3	58	174	
6	0476	VF 6 SBPL	0	0	0	0	38.00	LF	16.00	16.00	100	2001	2001	3	58	353	

LAND DESCRIPTION

TOTAL OB/XF 3,761

LN	USE CODE	CLS	LAND USE DESCRIPTION	CAP	RD	LOC ZONE	FRONT	DEPTH	TOT LND UTS	UNIT TYPE	DT	DPTH FACT	% COND	TOT ADJ	UNIT PRICE	ADJ UNIT PRICE	LAND VALUE	OTHER ADJUSTMENTS AND NOTES	YEAR	DENSITY	DECL	FRZ	YR	CONSRV
1	000100	C	SFR	0		PUD	0.00	0.00	22.00	FF		1.00	1.00	1.00	3,000.00	3,000.00	66,000							

REVIEW DATE 03/21/2018 BY DJX Total Acres: 0.00 Total Land Value: 66,000 Market: 0 Agricultural: 0 Common: 66,000 PRINTED 08/02/2023 BY SYS