BLOCK 2 LOT 8
IN OR 986/259
AMELIA PARK PHASE 1 UNIT 1

LAUERMAN ELIZABETH
1710 PARK AV
FERNANDINA BEACH, FL 32034

2023

00-00-31-102P-0002-0080

BUILDING CHARACTERISTICS

ELEMENT	CD	CONSTRUCTION
Exterior Wall	10	ABOVE AVG 100
Roof Structur	08	IRREGULAR 100
Roof Cover	03	COMP SHNGL 100
Interior Wall	05	DRYWALL 100
Interior Floo	14	CARPET 70
Interior Floo	15	HARDTILE 30
Air Condition	03	CENTRAL 100
Heating Type	04	AIR DUCTED 100
Bedrooms		3 100
Bathrooms		2.5 100
Frame	02	WOOD FRAME 100
Stories	1.	1. 100
Units		0 100
Occupancy	00	NONE 100
Quality	05	Quality Level 05
DOR CODE	0100	SINGLE FAMILY
MAP NUM		MKT AREA 01
NEIGHBORHOOD/LOC	1031.00	

AREA TYPE	TOTAL GROSS AREA	PCT OF BASE	TOT ADJ AREA	SUBAREA MARKET VALUE
BAS	2,311	100	2,311	358,475
FGR	405	55	223	34,591
FOP	90	30	27	4,188
FOP	121	30	36	5,584
FSP	174	40	70	10,858
PTO	56	5	3	465
TOTALS	3,157		2,670	414,162

MARKET ADJUSTMENTS

TYPE	MDL	EFF. AREA	TOT ADJ PTS	EFF. BASE RATE	REPL. COST NEW	AYB	EYB	ECON	FNCT		NORM	% COND
0500	01	2,670	120.2784	171.40	457,638	2002	2002	0	0	0	9.50	90.50

1 SFR CUST – 100% - 2003 Heated Area: 2311 HX Base Yr 2003

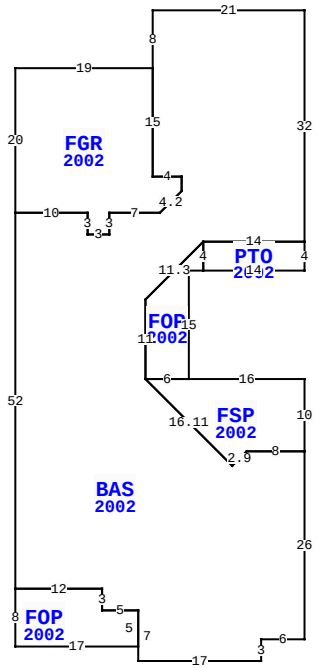

1710 PARK AVE, FERNANDINA BEACH

BLD DATE		LGL DATE	
XF DATE		LAND DATE	
INC DATE		AG DATE	

NASSAU COUNTY PROPERTY

PAGE 1 of 1 2

VALUATION SUMMARY

VALUATION BY		STANDARD
Tax Group: 2	Tax Dist:	
BUILDING MARKET VALUE		414,162
TOTAL MARKET OB/XF VALUE		8,583
TOTAL LAND VALUE - MARKET		150,000
TOTAL MARKET VALUE		572,745
SOH/AGL Deduction		274,354
ASSESSED VALUE		298,391
TOTAL EXEMPTION VALUE	HX HB WX	55,000
BASE TAXABLE VALUE		243,391
TOTAL JUST VALUE		572,745
NCON VALUE		0
INCOME VALUE		
PREVIOUS YEAR MKT VALUE		536,973

PERMIT NUM	DESCRIPTION	AMT	ISSUED
011482	NEW CONSTR	179,520	07/02/2001

SALES DATA

OFF RECORD Number	DATE	TYPE INST	Q / U	V / I	RSN CD	SALE PRICE
0986/0259	5/14/2001	WD	Q	V		46,900
GRANTOR: BRYLEN HOMES LTD						
GRANTEE: LAUERMAN WILLIAM D						
0898/1736	9/08/1999	WD	U	V	19	123,500
GRANTOR: AMELIA PARK DEVELOPME						
GRANTEE: BRYLEN HOMES LTD						

BUILDING NOTES

BUILDING DIMENSIONS

BAS=[YR=2002] W21 S8 FGR=[YR=2002] W19 S20 E10 S3 E3 N3 E7 U3 R3 N2W4 N15$ S15E4S2 D3 L3 W7S3 W3 N3 W10 S52
FOP=[YR=2002] S8 E17 N5 W5 N3 W12 $ E12 S3 E5 S7 E17 N3 E6 N26 FSP=[YR=2002] N10 W16 FOP=[YR=2002] N15 E2
PTO=[YR=2002] E14N4 W14S4$ N4 L8 D8 S11E6$W6 D12 R12 U2 R2 E8$W8 D2 L2 L12 U12 N11 U8 R8 E14N32$.

EXTRA FEATURES

LN	OB/XF CODE	DESCRIPTION	BLD	CAP	L	W	UNITS	UT	Adj R	ADJ UNIT PRICE	ORIG COND	YEAR ON	YEAR ACTUAL	Q	% COND	OB/XF MKT VALUE	NOTES
1	0500	FP-PRE FAB	0	100	0	0	1.00	UT	3,500.00	3,500.00	100	2002	2002	3	87	3,045	
2	0810	CONCRETE A	0	100	24	3	72.00	SF	6.50	6.50	100	2002	2002	3	83	388	
3	0810	CONCRETE A	0	100	0	0	581.00	SF	6.50	6.50	100	2002	2002	3	83	3,134	
4	0855	CONC PAVER	0	100	16	15	240.00	SF	10.00	10.00	100	2003	2003	3	84	2,016	

LAND DESCRIPTION

TOTAL OB/XF 8,583

LN	USE CODE	CLS	LAND USE DESCRIPTION	CAP	RD	LOC ZONE	FRONT	DEPTH	TOT LND UTS	UNIT TYPE	DT	DPTH FACT	% COND	TOT ADJ	UNIT PRICE	ADJ UNIT PRICE	LAND VALUE	OTHER ADJUSTMENTS AND NOTES	YEAR	DENSITY	DECL	FRZ	YR	CONSRV
1	000100	C	SFR	100		PUD	0.00	0.00	50.00	FF		1.00	1.00	1.00	3,000.00	3,000.00	150,000							

REVIEW DATE 03/21/2018 BY DJX Total Acres: 0.00 Total Land Value: 150,000 Market: 0 Agricultural: 0 Common: 150,000 PRINTED 08/02/2023 BY SYS