LOT 20
IN OR 2052/965
ALTA VISTA 2 PB 2/44

SMITH CHARLES M JR & JAYE S
112 N WOLFF ST
FERNANDINA BEACH, FL 32034

2023

00-00-31-100B-0020-0000

NASSAU COUNTY PROPERTY

BUILDING CHARACTERISTICS

ELEMENT	CD	CONSTRUCTION
Exterior Wall	19	COMMON BRK 80
Exterior Wall	10	ABOVE AVG 20
Roof Structur	03	GABLE/HIP 100
Roof Cover	03	COMP SHNGL 100
Interior Wall	05	DRYWALL 100
Interior Floo	12	HARDWOOD 100
Air Condition	03	CENTRAL 100
Heating Type	04	AIR DUCTED 100
Bedrooms		4 100
Bathrooms		3 100
Frame	02	WOOD FRAME 100
Stories	1.	1. 100
Units		0 100
BUD8 Adjustme	02	DIST FB 100
Occupancy	00	NONE 100
Quality	04	Quality Level 04
DOR CODE	0100	SINGLE FAMILY
MAP NUM		MKT AREA 01
NEIGHBORHOOD/LOC	1007.00	

AREA TYPE	TOTAL GROSS AREA	PCT OF BASE	TOT ADJ AREA	SUBAREA MARKET VALUE
BAS	500	100	500	54,719
BAS	1,810	100	1,810	198,083
BAS	264	100	264	28,892
DCK	513	10	51	5,582
FGR	528	55	290	31,737
FOP	36	30	11	1,204
FSP	240	40	96	10,506
UBM	748	20	150	16,416
UOP	44	20	9	985
TOTALS	4,683		3,181	348,124

MARKET ADJUSTMENTS

TYPE	MDL	EFF. AREA	TOT ADJ PTS	EFF. BASE RATE	REPL. COST NEW	AYB	EYB	ECON	FNCT		NORM	% COND
0900	01	3,181	120.9432	143.62	456,855	1958	1990	0	0	0	23.80	76.20

1 SNGL FAM – 100% - 2018 Heated Area: 2574 HX Base Yr 2018

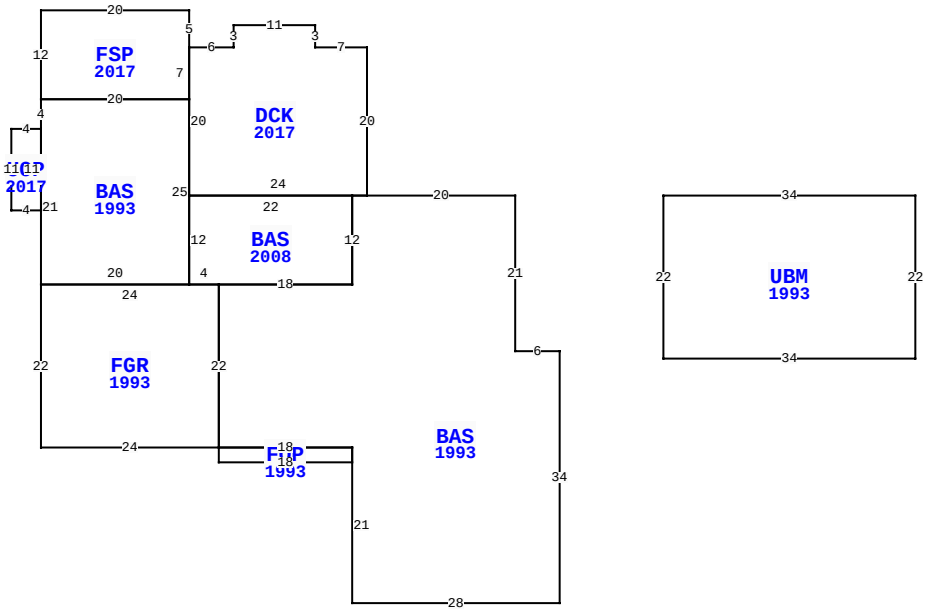

112 N WOLFF ST, FERNANDINA BEACH

BLD DATE		LGL DATE	
XF DATE		LAND DATE	
INC DATE		AG DATE	

VALUATION SUMMARY

VALUATION BY		STANDARD
Tax Group: 2	Tax Dist:	
BUILDING MARKET VALUE		348,124
TOTAL MARKET OB/XF VALUE		24,739
TOTAL LAND VALUE - MARKET		444,000
TOTAL MARKET VALUE		816,863
SOH/AGL Deduction		136,270
ASSESSED VALUE		680,593
TOTAL EXEMPTION VALUE	HX HB	50,000
BASE TAXABLE VALUE		630,593
TOTAL JUST VALUE		816,863
NCON VALUE		0
INCOME VALUE		
PREVIOUS YEAR MKT VALUE		778,899

PERMIT NUM	DESCRIPTION	AMT	ISSUED
20163223	DECK	240,000	11/22/2016
20162527	DEMODECK	500	09/16/2016
20120857	REPLACE WNDOW & D	2,826	05/14/2012
20112297	ELEC OTHER	150	12/28/2011
20101524	3 STORM SHUTTER W	400	09/09/2010
20081580	UG ELEC	1,000	10/16/2008

SALES DATA

OFF RECORD Number	DATE	TYPE INST	Q / U	V / I	RSN CD	SALE PRICE
2052/0965	6/13/2016	WD	Q	I	01	600,000
GRANTOR: HARNAGE GARY CARLTON						
GRANTEE: SMITH CHARLES M JR						
0970/1465	2/13/2001	WD	U	I	09	100
GRANTOR: HARNAGE GARY CARLTON						
GRANTEE: HARNAGE GARY CARLTO						

BUILDING NOTES

BUILDING DIMENSIONS

BAS=[YR=1993] W20 DCK=[YR=2017] N20 W7 N3 W11 S3 W6 FSP=[YR=2017] N5 W20 S12 BAS=[YR=1993] S4 UOP=[YR=2017] W4 S11 E4 N11$ S21 FGR=[YR=1993] S22 E24 N22 BAS=[YR=2008] E18 N12 W22 S12 E4$ W24$ E20 N25 W20$ E20 N7$ S20 E24$ W2 S12 W18 S22 FOP=[YR=1993] S2 E18 N2 W18$ E18 S21 E28 N34W6 N21$ PTR= E20 UBM=[YR=1993] E34 S22 W34 N22$ W20$.

EXTRA FEATURES

LN	OB/XF CODE	DESCRIPTION	BLD	CAP	L	W	UNITS	UT	Adj R	ADJ UNIT PRICE	ORIG COND	YEAR ON	YEAR ACTUAL	Q	% COND	OB/XF MKT VALUE	NOTES
1	0500	FP-PRE FAB	0	100	0	0	1.00	UT	3,500.00	3,500.00	100	1958	1958	3	21	735	
2	0810	CONCRETE A	0	100	0	0	2,235.00	SF	6.50	6.50	100	1958	1958	3	20	2,906	
3	0812	CONCRETE C	0	100	0	0	2,015.00	SF	4.00	4.00	100	1998	1998	3	77	6,206	
6	1127	BRICK 8"	0	100	0	0	147.00	SF	11.00	11.00	100	2017	2017	3	99	1,601	
7	0825	BRICK	0	100	0	0	1,074.00	SF	12.50	12.50	100	2017	2017	3	99	13,291	

LAND DESCRIPTION

TOTAL OB/XF 24,739

LN	USE CODE	CLS	LAND USE DESCRIPTION	CAP	RD	LOC ZONE	FRONT	DEPTH	TOT LND UTS	UNIT TYPE	DT	DPTH FACT	% COND	TOT ADJ	UNIT PRICE	ADJ UNIT PRICE	LAND VALUE	OTHER ADJUSTMENTS AND NOTES	YEAR	DENSITY	DECL	FRZ	YR	CONSRV
1	000130	C	SFR WATER	100			111.00	318.00	111.00	FF		1.00	1.00	1.00	4,000.00	4,000.00	444,000							

REVIEW DATE 12/04/2017 BY DJ Total Acres: 0.00 Total Land Value: 444,000 Market: 0 Agricultural: 0 Common: 444,000 PRINTED 08/02/2023 BY SYS