LOT 12
IN OR 2120/1508
5115 PARKWAY PB 5/196

APPLEBY CHAD E & MICHELLE C
1784 JACKSON COURT
FERNANDINA BEACH, FL 32034

2023

00-00-30-5115-0012-0000

BUILDING CHARACTERISTICS

ELEMENT	CD	CONSTRUCTION
Exterior Wall	20	FACE BRICK 100
Roof Structur	08	IRREGULAR 100
Roof Cover	03	COMP SHNGL 100
Interior Wall	05	DRYWALL 100
Interior Floo	12	HARDWOOD 80
Interior Floo	11	CLAY TILE 20
Air Condition	03	CENTRAL 100
Heating Type	04	AIR DUCTED 100
Bedrooms		4 100
Bathrooms		2.5 100
Frame	02	WOOD FRAME 100
Stories	2.	2. 100
Units		0 100
Occupancy	00	NONE 100
Quality	05	Quality Level 05
DOR CODE	0100	SINGLE FAMILY
MAP NUM		MKT AREA 03
NEIGHBORHOOD/LOC	3033.00	

AREA TYPE	TOTAL GROSS AREA	PCT OF BASE	TOT ADJ AREA	SUBAREA MARKET VALUE
BAS	1,360	100	1,360	183,003
FGR	460	55	253	34,043
FOP	315	30	94	12,649
FUS	1,183	100	1,183	159,185
UOP	53	20	11	1,480
TOTALS	3,371		2,901	390,360

MARKET ADJUSTMENTS

TYPE	MDL	EFF. AREA	TOT ADJ PTS	EFF. BASE RATE	REPL. COST NEW	AYB	EYB	ECON	FNCT		NORM	% COND
0500	01	2,901	119.5304	170.33	494,127	1994	1994	0	0	0	21.00	79.00

1 SFR CUST – 100% - 2018 Heated Area: 2543 HX Base Yr 2018

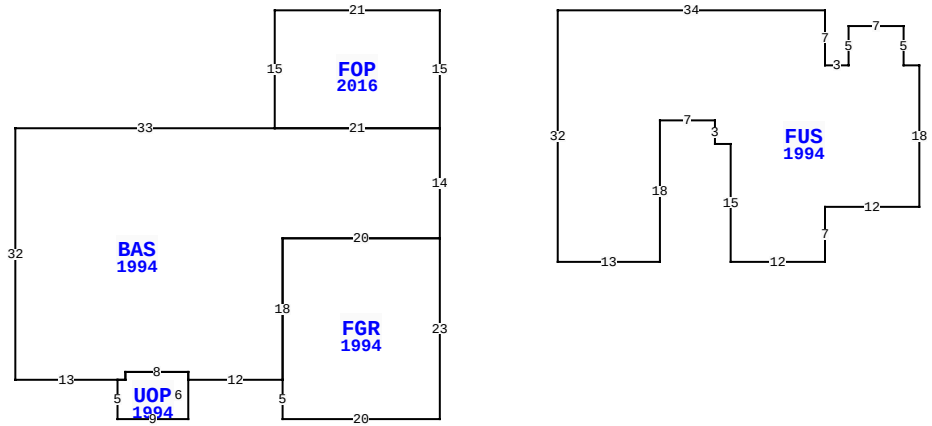

1784 JACKSON CT, FERNANDINA BEACH

BLD DATE		LGL DATE	
XF DATE		LAND DATE	
INC DATE		AG DATE	

NASSAU COUNTY PROPERTY

PAGE 1 of 1 8

VALUATION SUMMARY

VALUATION BY		STANDARD
Tax Group: 8	Tax Dist:	
BUILDING MARKET VALUE		390,360
TOTAL MARKET OB/XF VALUE		26,361
TOTAL LAND VALUE - MARKET		250,000
TOTAL MARKET VALUE		666,721
SOH/AGL Deduction		226,533
ASSESSED VALUE		440,188
TOTAL EXEMPTION VALUE	HX HB	50,000
BASE TAXABLE VALUE		390,188
TOTAL JUST VALUE		666,721
NCON VALUE		0
INCOME VALUE		
PREVIOUS YEAR MKT VALUE		595,761

PERMIT NUM	DESCRIPTION	AMT	ISSUED
B1631895	ADDITION	0	03/07/2016
B9602754	SWIM POOL	19,000	03/01/1996
B9401134	NEW CONSTR	164,000	06/01/1994

SALES DATA

OFF RECORD Number	DATE	TYPE INST	Q / U	V / I	RSN CD	SALE PRICE
2120/1508	5/12/2017	WD	Q	I	01	618,000
GRANTOR: BIAGINI MICHAEL A & K						
GRANTEE: APPLEBY CHAD E & MI						
1863/1189	6/20/2013	WD	Q	I	02	420,000
GRANTOR: SMITH RICHARD H JR &						
GRANTEE: BIAGINI MICHAEL A &						

BUILDING NOTES

BUILDING DIMENSIONS

FOP=[YR=2016] W21 S15 BAS=[YR=1994] W33 S32 E13 UOP=[YR=1994] S5 E9 N6 W8 S1 W1$ E1 N1 E8 S1 E12 FGR=[YR=1994] S5 E20 N23 W20 S18$ N18 E20 N14 W21$ E21 N15$ PTR=E15 FUS=[YR=1994] E34 S7 E3 N5 E7 S5 E2 S18 W12 S7 W12 N15 W2 N3 W7 S18 W13 N32$ W15$.

EXTRA FEATURES

LN	OB/XF CODE	DESCRIPTION	BLD	CAP	L	W	UNITS	UT	Adj R	ADJ UNIT PRICE	ORIG COND	YEAR ON	YEAR ACTUAL	Q	% COND	OB/XF MKT VALUE	NOTES
1	0504	FP-ELECTRI	0	100	0	0	1.00	UT	2,000.00	2,000.00	100	1994	1994	3	77	1,540	
2	0812	CONCRETE C	0	100	0	0	1,473.00	SF	4.00	4.00	100	1994	1994	3	70	4,124	
3	0810	CONCRETE A	0	100	0	0	168.00	SF	6.50	6.50	100	1994	1994	3	70	764	
4	0855	CONC PAVER	0	100	0	0	176.00	SF	10.00	10.00	100	2016	2016	3	97	1,707	
6	0810	CONCRETE A	0	100	8	4	32.00	SF	6.50	6.50	100	1994	1994	3	70	146	
7	0855	CONC PAVER	0	100	0	0	1,063.00	SF	10.00	10.00	100	2016	2016	3	97	10,311	
8	0861	POOL GUNIT	0	100	0	0	457.00	SF	85.00	85.00	100	1996	1996	3	20	7,769	

LAND DESCRIPTION

TOTAL OB/XF 26,361

LN	USE CODE	CLS	LAND USE DESCRIPTION	CAP	RD	LOC ZONE	FRONT	DEPTH	TOT LND UTS	UNIT TYPE	DT	DPTH FACT	% COND	TOT ADJ	UNIT PRICE	ADJ UNIT PRICE	LAND VALUE	OTHER ADJUSTMENTS AND NOTES	YEAR	DENSITY	DECL	FRZ	YR	CONSRV
1	000100	C	SFR	100		RG-1	0.00	0.00	1.00	LT		1.00	1.00	1.00	250,000.00	250,000.00	250,000							

REVIEW DATE 07/19/2016 BY DJ Total Acres: 0.00 Total Land Value: 250,000 Market: 0 Agricultural: 0 Common: 250,000 PRINTED 08/02/2023 BY SYS