LOT 2
IN OR 1920/1216
4811 PARKWAY PB 5/132

FULLER PEGGY E
1795 FAIRWAY DR
FERNANDINA BEACH, FL 32034

2023

00-00-30-4811-0002-0000

NASSAU COUNTY PROPERTY

BUILDING CHARACTERISTICS

ELEMENT	CD	CONSTRUCTION
Exterior Wall	20	FACE BRICK 80
Exterior Wall	16	WD FR STUC 20
Roof Structur	03	GABLE/HIP 100
Roof Cover	03	COMP SHNGL 100
Interior Wall	05	DRYWALL 100
Interior Floo	14	CARPET 70
Interior Floo	12	HARDWOOD 30
Air Condition	03	CENTRAL 100
Heating Type	04	AIR DUCTED 100
Bedrooms		3 100
Bathrooms		3 100
Frame	02	WOOD FRAME 100
Stories	2.	2. 100
Units		0 100
Occupancy	00	NONE 100
Quality	06	Quality Level 06
DOR CODE	0100	SINGLE FAMILY
MAP NUM		MKT AREA 03
NEIGHBORHOOD/LOC	3033.00	

AREA TYPE	TOTAL GROSS AREA	PCT OF BASE	TOT ADJ AREA	SUBAREA MARKET VALUE
BAS	1,830	100	1,830	234,871
BAS	150	100	150	19,252
FGR	583	55	321	41,199
FOP	114	30	34	4,364
FOP	163	30	49	6,289
FST	40	55	22	2,824
FUS	1,049	100	1,049	134,633
PTO	72	5	4	513
UOP	40	20	8	1,027
UOP	42	20	8	1,027
TOTALS	4,170		3,492	448,180

MARKET ADJUSTMENTS

TYPE	MDL	EFF. AREA	TOT ADJ PTS	EFF. BASE RATE	REPL. COST NEW	AYB	EYB	ECON	FNCT		NORM	% COND
0500	01	3,492	114.7930	163.58	571,221	1991	1991	0	0	0	21.54	78.46

1 SFR CUST – 100% - 0 Heated Area: 3029 HX Base Yr

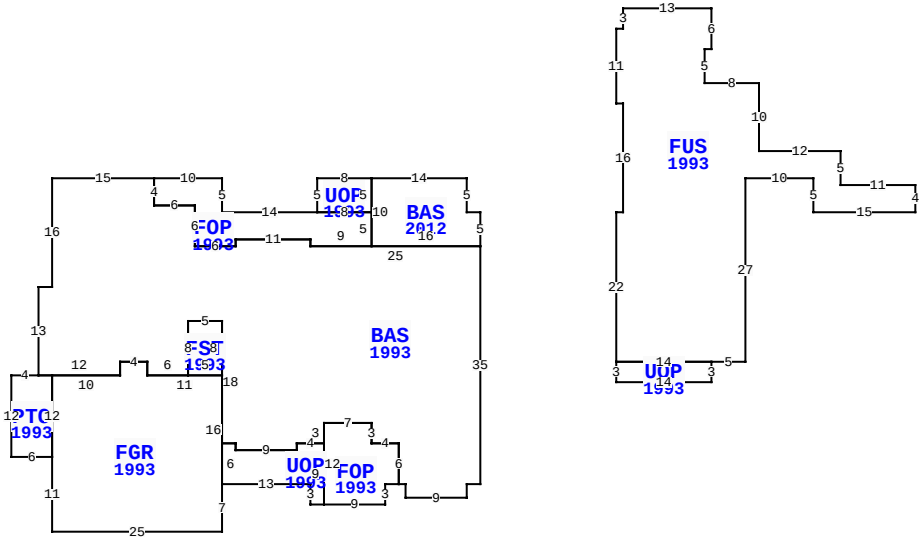

** This building has 11 Sub-Areas

1795 FAIRWAY DR, FERNANDINA BEACH

BLD DATE		LGL DATE	
XF DATE		LAND DATE	
INC DATE		AG DATE	

VALUATION SUMMARY

VALUATION BY		STANDARD
Tax Group: 8	Tax Dist:	
BUILDING MARKET VALUE		448,180
TOTAL MARKET OB/XF VALUE		7,566
TOTAL LAND VALUE - MARKET		350,000
TOTAL MARKET VALUE		805,746
SOH/AGL Deduction		494,577
ASSESSED VALUE		311,169
TOTAL EXEMPTION VALUE	HX HB WX	55,000
BASE TAXABLE VALUE		256,169
TOTAL JUST VALUE		805,746
NCON VALUE		0
INCOME VALUE		
PREVIOUS YEAR MKT VALUE		631,462

PERMIT NUM	DESCRIPTION	AMT	ISSUED
6449	NEW CONSTR	106,551	05/08/1990

SALES DATA

OFF RECORD Number	DATE	TYPE INST	Q U /	V I /	RSN CD	SALE PRICE
1920/1216	5/09/2014	QC	U	I	11	242,600
GRANTOR: FULLER DOUGLAS W ETAL						
GRANTEE: FULLER PEGGY E						
0555/0412	10/21/1988	WD	Q	V		56,500
GRANTOR: RUTLAND ROBERT J						
GRANTEE: FULLER DONALD E						

BUILDING NOTES

BUILDING DIMENSIONS

BAS=[YR=2012] W2N5W14UOP=[YR=1993] W8S5 FOP=[YR=1993]
W14N5W10BAS=[YR=1993] W15S16 W2S13 PTO=[YR=1993]
W4S12E6FGR=[YR=1993] S11E25N7 UOP=[YR=1993] E13S3E2
FOP=[YR=1993] E9N3E2N6W4 N3W7S12$N9 W4S1W9N1W2S6$N16
FST=[YR=1993] N8W5 S8E5$W11N2W4S2W10 S12$N12W2$
E12N2E4S2E6N8E5S18E2S1E9N1E4N3 E7S3E4S6E1S2E9N2E2 N35W25N1W11
S1W6N6W6N4$S4E6S6E6N1E11S1E9N5 W8$E8N5$S10E16N5$ PTR=E20
FUS=[YR=1993] E1N16W1N11E1N3 E13S6W1 S5E8S10E12S5E11S4W15N5
W10S27 W5UOP=[YR=1993] S3W14N3E14$W14 N22$ W20$.

EXTRA FEATURES

LN	OB/XF CODE	DESCRIPTION	BLD	CAP	L	W	UNITS	UT	Adj R	ADJ UNIT PRICE	ORIG COND	YEAR ON	YEAR ACTUAL	Q	% COND	OB/XF MKT VALUE	NOTES
1	0504	FP-ELECTRI	0	100	0	0	1.00	UT	2,000.00	2,000.00	100	1991	1991	3	72	1,440	
2	0812	CONCRETE C	0	100	0	0	1,434.00	SF	4.00	4.00	100	1991	1991	3	64	3,671	
3	0825	BRICK	0	100	0	0	204.00	SF	12.50	12.50	100	1991	1991	3	88	2,244	
4	0476	VF 6 SBPL	0	100	0	0	12.00	LF	32.00	32.00	100	2000	2000	3	55	211	

LAND DESCRIPTION

TOTAL OB/XF 7,566

LN	USE CODE	CLS	LAND USE DESCRIPTION	CAP	RD	LOC ZONE	FRONT	DEPTH	TOT LND UTS	UNIT TYPE	DT	DPTH FACT	% COND	TOT ADJ	UNIT PRICE	ADJ UNIT PRICE	LAND VALUE	OTHER ADJUSTMENTS AND NOTES	YEAR	DENSITY	DECL	FRZ	YR	CONSRV
1	000140	C	SFR GOLF A	100		RS-1	0.00	0.00	1.00	LT		1.00	1.00	1.00	350,000.00	350,000.00	350,000							

REVIEW DATE 02/21/2017 BY DJ Total Acres: 0.00 Total Land Value: 350,000 Market: 0 Agricultural: 0 Common: 350,000 PRINTED 08/02/2023 BY SYS