LOT 16
THE SANDPIPER #2 PB 6/233

LINDER JEFFREY & PAMELA
95020 SANDPIPER LOOP
FERNANDINA BEACH, FL 32034

2023

00-00-30-2060-0016-0000

BUILDING CHARACTERISTICS

ELEMENT	CD	CONSTRUCTION
Exterior Wall	17	CB STUCCO 100
Roof Structur	01	FLAT 100
Roof Cover	07	CONC TILE 100
Interior Wall	05	DRYWALL 100
Interior Floo	11	CLAY TILE 50
Interior Floo	14	CARPET 50
Air Condition	03	CENTRAL 100
Heating Type	04	AIR DUCTED 100
Bedrooms		3 100
Bathrooms		3.5 100
Frame	02	WOOD FRAME 100
Stories	3.	3. 100
Units		0 100
Quality	05	Quality Level 05
DOR CODE	0100	SINGLE FAMILY
MAP NUM		MKT AREA 03
NEIGHBORHOOD/LOC	3004.00	

AREA TYPE	TOTAL GROSS AREA	PCT OF BASE	TOT ADJ AREA	SUBAREA MARKET VALUE
BAS	108	100	108	13,877
BAS	415	100	415	53,326
FGR	397	55	218	28,012
FOP	18	30	5	642
FOP	40	30	12	1,542
FOP	65	30	20	2,570
FST	30	55	16	2,056
FUS	1,075	100	1,075	138,133
FUS	1,095	100	1,095	140,704
UOP	40	20	8	1,028
TOTALS	4,032		3,121	401,037

MARKET ADJUSTMENTS

TYPE	MDL	EFF. AREA	TOT ADJ PTS	EFF. BASE RATE	REPL. COST NEW	AYB	EYB	ECON	FNCT		NORM	% COND
0320	11	3,121	147.0160	139.67	435,910	2006	2006	0	0	0	8.00	92.00

1 TOWNHOUSE - 100% - 2020 Heated Area: 2693 HX Base Yr 2020

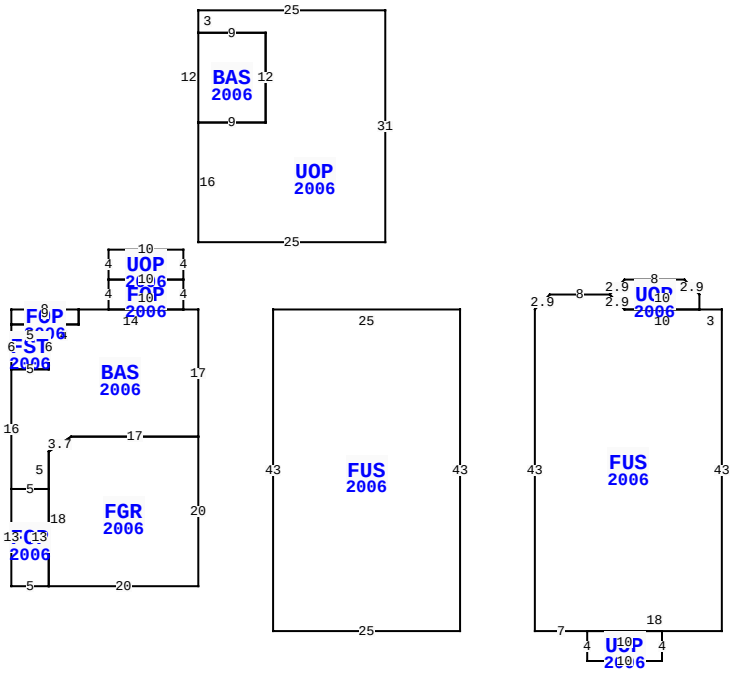

** This building has 13 Sub-Areas

95020 SANDPIPER LOOP, FERNANDINA BEACH

BLD DATE	11/06/2006 0	LGL DATE	
XF DATE		LAND DATE	05/15/2023 MLU
INC DATE		AG DATE	

NASSAU COUNTY PROPERTY

PAGE 1 of 1 8

VALUATION SUMMARY

VALUATION BY		STANDARD
Tax Group: 8	Tax Dist:	
BUILDING MARKET VALUE		401,037
TOTAL MARKET OB/XF VALUE		21,861
TOTAL LAND VALUE - MARKET		450,000
TOTAL MARKET VALUE		872,898
SOH/AGL Deduction		234,286
ASSESSED VALUE		638,612
TOTAL EXEMPTION VALUE	HX HB	50,000
BASE TAXABLE VALUE		588,612
TOTAL JUST VALUE		872,898
NCON VALUE		0
INCOME VALUE		
PREVIOUS YEAR MKT VALUE		717,603

PERMIT NUM	DESCRIPTION	AMT	ISSUED
C0312048	CO ISSUED	336,600	12/01/2003
B0312048	NEW CONSTR	336,600	12/01/2003
R035670	REPAIR/RRF	5,000	12/01/2003

SALES DATA

OFF RECORD Number	DATE	TYPE INST	Q / U	V / I	RSN CD	SALE PRICE
2276/1552	5/24/2019	WD	Q	I	02	785,000
GRANTOR: DALZELL JULIAN CHARLE						
GRANTEE: LINDER JEFFREY & PA						
2062/1825	8/01/2016	WD	Q	I	01	600,000
GRANTOR: CARLSEN WILLIAM F LIV						
GRANTEE: DALZELL JULIAN CHAR						

BUILDING NOTES

BUILDING DIMENSIONS

BAS=[YR=2006] W2 FOP=[YR=2006] N4 UOP=[YR=2006] N4 W10 S4 E10$ W10 S4 E10$ W14 FOP=[YR=2006] W9 S2 FST=[YR=2006] S6 E5 N6 W5$ E9 N2$ S2 W4 S6 W5 S16 FOP=[YR=2006] S13 E5 FGR=[YR=2006] E20 N20 W17 D2 L3 S18$ N13 W5$ E5 N5 U2 R3 E17 N17$ PTR=[YR=2006] E10 FUS=[YR=2006] E25 S43 W25 N43$ W10$ PTR=[YR=2006] E70 FUS=[YR=2006] W3 UOP=[YR=2006] N2 U2 L2 W8 D2 L2 D2 R2 E10$ W10 U2 L2 W8 D2 L2 S43 E7 UOP=[YR=2006] S4 E10 N4 W10$ E18 N43$ W70$ PTR=[YR=2006] N40 UOP=[YR=2006] E25 S31 W25 N16 BAS=[YR=2006] N12 E9 S12 W9$ E9 N12 W9 N3$ S40$.

EXTRA FEATURES

LN	OB/XF CODE	DESCRIPTION	BLD	CAP	L	W	UNITS	UT	Adj R	ADJ UNIT PRICE	ORIG COND	YEAR ON	YEAR ACTUAL	Q	% COND	OB/XF MKT VALUE	NOTES
1	0855	CONC PAVER	0	100	0	0	883.00	SF	10.00	10.00	100	2006	2006	3	88	7,770	
2	0855	CONC PAVER	0	100	0	0	55.00	SF	10.00	10.00	100	2006	2006	3	88	484	
3	0855	CONC PAVER	0	100	12	4	48.00	SF	10.00	10.00	100	2006	2006	3	88	422	
4	0500	FP-PRE FAB	0	100	0	0	1.00	UT	3,500.00	3,500.00	100	2006	2006	3	91	3,185	
5	0410	ELEVATOR	0	100	0	0	1.00	UT	10,000.00	10,000.00	100	2006	2006	3	100	10,000	

LAND DESCRIPTION

TOTAL OB/XF 21,861

LN	USE CODE	CLS	LAND USE DESCRIPTION	CAP	RD	LOC ZONE	FRONT	DEPTH	TOT LND UTS	UNIT TYPE	DT	DPTH FACT	% COND	TOT ADJ	UNIT PRICE	ADJ UNIT PRICE	LAND VALUE	OTHER ADJUSTMENTS AND NOTES	YEAR	DENSITY	DECL	FRZ	YR	CONSRV
1	000100	C	SFR	100		RG-1	0.00	0.00	1.00	UT		1.00	1.00	1.00	450,000.00	450,000.00	450,000							

REVIEW DATE 03/27/2017 BY DJX Total Acres: 0.00 Total Land Value: 450,000 Market: 0 Agricultural: 0 Common: 450,000 PRINTED 08/02/2023 BY SYS