LOT 31
OCEAN WALK PB 5/373

PICOU JENNIFER TERESA/PARKER LARRY JOHNSON
4976 SPANISH OAKS CIR
FERNANDINA BEACH, FL 32034

2023

00-00-30-155W-0031-0000

NASSAU COUNTY PROPERTY

BUILDING CHARACTERISTICS

ELEMENT	CD	CONSTRUCTION
Exterior Wall	16	WD FR STUC 100
Roof Structur	03	GABLE/HIP 100
Roof Cover	03	COMP SHNGL 100
Interior Wall	05	DRYWALL 100
Interior Floo	14	CARPET 90
Interior Floo	11	CLAY TILE 10
Air Condition	03	CENTRAL 100
Heating Type	04	AIR DUCTED 100
Bedrooms		3 100
Bathrooms		2 100
Frame	02	WOOD FRAME 100
Stories	1.	1. 100
Units		0 100
Quality	04	Quality Level 04
DOR CODE	0100	SINGLE FAMILY
MAP NUM		MKT AREA 03
NEIGHBORHOOD/LOC	3033.00	

AREA TYPE	TOTAL GROSS AREA	PCT OF BASE	TOT ADJ AREA	SUBAREA MARKET VALUE
BAS	1,958	100	1,958	286,608
FEP	200	80	160	23,420
FGR	631	55	347	50,793
FOP	89	30	27	3,952
PTO	12	5	1	146
PTO	190	5	10	1,464
TOTALS	3,080		2,503	366,385

MARKET ADJUSTMENTS

TYPE	MDL	EFF. AREA	TOT ADJ PTS	EFF. BASE RATE	REPL. COST NEW	AYB	EYB	ECON	FNCT		NORM	% COND
0900	11	2,503	138.5050	164.47	411,668	1998	2000	0	0	0	11.00	89.00

1 SNGL FAM – 100% - 0 Heated Area: 1958 HX Base Yr

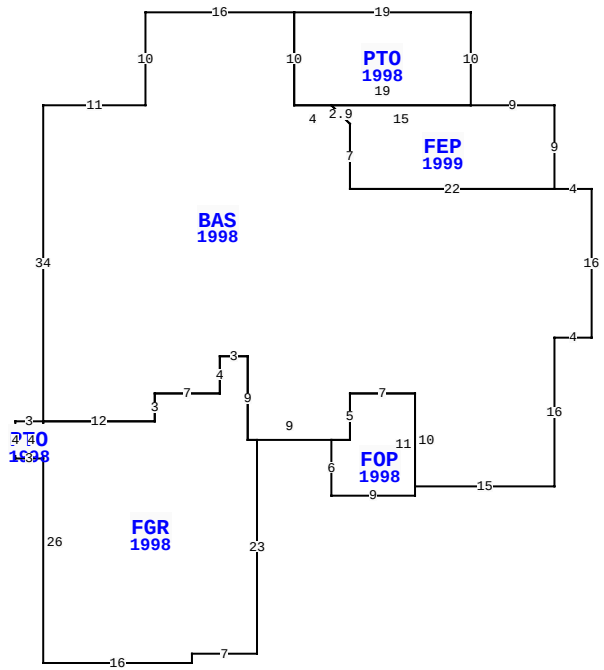

4976 SPANISH OAKS CIR, FERNANDINA BEACH

BLD DATE	03/03/2023 NW	LGL DATE	
XF DATE		LAND DATE	
INC DATE		AG DATE	

VALUATION SUMMARY

VALUATION BY		STANDARD
Tax Group: 8	Tax Dist:	
BUILDING MARKET VALUE		366,385
TOTAL MARKET OB/XF VALUE		9,143
TOTAL LAND VALUE - MARKET		250,000
TOTAL MARKET VALUE		625,528
SOH/AGL Deduction		117,944
ASSESSED VALUE		507,584
TOTAL EXEMPTION VALUE	HX HB	50,000
BASE TAXABLE VALUE		457,584
TOTAL JUST VALUE		625,528
NCON VALUE		0
INCOME VALUE		
PREVIOUS YEAR MKT VALUE		542,758

PERMIT NUM	DESCRIPTION	AMT	ISSUED
B9704163	NEW CONSTR	97,865	08/01/1997

SALES DATA

OFF RECORD Number	DATE	TYPE INST	Q U	V I	RSN CD	SALE PRICE
2620/0893	2/21/2023	WD	Q	I	02	849,000
GRANTOR: CARBAUGH KENNETH E &						
GRANTEE: PICOU JENNIFER TERE						
2404/0472	10/24/2020	WD	Q	I	02	515,000
GRANTOR: PHILLIPS BEVERLY ANN						
GRANTEE: CARBAUGH KENNETH E						

BUILDING NOTES

BUILDING DIMENSIONS

BAS=[YR=1998] W4 FEP=[YR=1999] N9 W9 PTO=[YR=1998] N10 W19 S10 E19$ W15 R2 D2 S7 E22$ W22 N7 U2 L2 W4 N10 W16 S10 W11 S34 PTO=[YR=1998] W3 S4 E3 N4 $ FGR=[YR=1998] S26 E16 N1 E7 N23 W1 N9 W3 S4 W7 S3 W12 $ E12 N3 E7 N4 E3 S9 E9 FOP=[YR=1998] S6 E9 N11 W7 S5 W2$ E2 N5 E7 S10 E15 N16 E4 N16 $.

EXTRA FEATURES

LN	OB/XF CODE	DESCRIPTION	BLD	CAP	L	W	UNITS	UT	Adj R	ADJ UNIT PRICE	ORIG COND	YEAR ON	YEAR ACTUAL	Q	% COND	OB/XF MKT VALUE	NOTES
1	0500	FP-PRE FAB	0	100	0	0	1.00	UT	3,500.00	3,500.00	100	1998	1998	3	83	2,905	
2	0810	CONCRETE A	0	100	0	0	1,168.00	SF	6.50	6.50	100	1998	1998	3	77	5,846	
3	1076	TRELLIS A	0	100	18	10	180.00	SF	7.50	7.50	100	2001	2001	3	29	392	

LAND DESCRIPTION

TOTAL OB/XF 9,143

LN	USE CODE	CLS	LAND USE DESCRIPTION	CAP	RD	LOC ZONE	FRONT	DEPTH	TOT LND UTS	UNIT TYPE	DT	DPTH FACT	% COND	TOT ADJ	UNIT PRICE	ADJ UNIT PRICE	LAND VALUE	OTHER ADJUSTMENTS AND NOTES	YEAR	DENSITY	DECL	FRZ	YR	CONSRV
1	000100	C	SFR	100		RS-1	0.00	0.00	1.00	LT		1.00	1.00	1.00	250,000.00	250,000.00	250,000							

REVIEW DATE 04/14/2020 BY DJA Total Acres: 0.00 Total Land Value: 250,000 Market: 0 Agricultural: 0 Common: 250,000 PRINTED 08/02/2023 BY SYS