LOT 24 & PT LOT 25 S-1
IN OR 806/1148
OCEAN WALK PB 5/373

GERARDE CORNELIA S
4991 SPANISH OAKS CIRCLE
FERNANDINA BEACH, FL 32034

2023

00-00-30-155W-0024-0000

BUILDING CHARACTERISTICS

ELEMENT	CD	CONSTRUCTION
Exterior Wall	16	WD FR STUC 100
Roof Structur	03	GABLE/HIP 100
Roof Cover	03	COMP SHNGL 100
Interior Wall	05	DRYWALL 100
Interior Floo	14	CARPET 70
Interior Floo	11	CLAY TILE 30
Air Condition	03	CENTRAL 100
Heating Type	04	AIR DUCTED 100
Bedrooms		4 100
Bathrooms		3 100
Frame	02	WOOD FRAME 100
Stories	2.	2. 100
Units		0 100
Quality	04	Quality Level 04
DOR CODE	0100	SINGLE FAMILY
MAP NUM		MKT AREA 03
NEIGHBORHOOD/LOC	3033.00	

AREA TYPE	TOTAL GROSS AREA	PCT OF BASE	TOT ADJ AREA	SUBAREA MARKET VALUE
BAS	2,143	100	2,143	295,703
BAS	550	100	550	75,892
FGR	503	55	277	38,222
FOP	132	30	40	5,520
FOP	16	30	5	690
FOP	48	30	14	1,932
FOP	96	30	29	4,001
FST	24	55	13	1,794
FUS	684	100	684	94,382
SFB	190	80	152	20,974
TOTALS	4,432		3,916	540,352

MARKET ADJUSTMENTS

TYPE	MDL	EFF. AREA	TOT ADJ PTS	EFF. BASE RATE	REPL. COST NEW	AYB	EYB	ECON	FNCT		NORM	% COND
0900	11	3,916	130.5612	155.04	607,137	1996	2000	0	0	0	11.00	89.00

1 SNGL FAM – 100% - 1997 Heated Area: 3529 HX Base Yr 1997

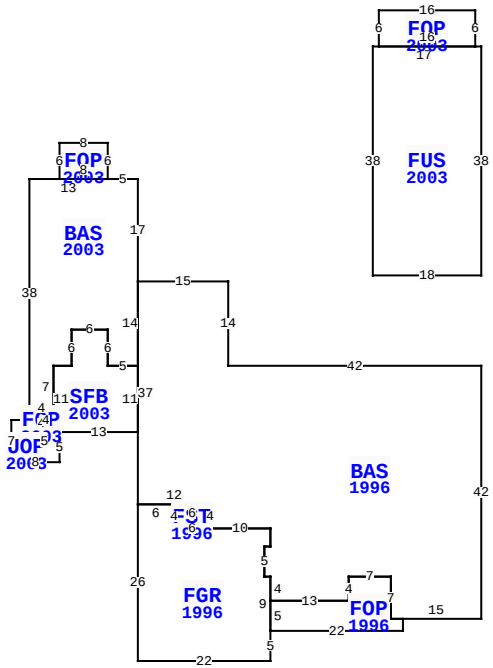

** This building has 11 Sub-Areas

4991 SPANISH OAKS CIR, FERNANDINA BEACH

BLD DATE	03/03/2023 NW	LGL DATE	
XF DATE		LAND DATE	
INC DATE		AG DATE	

EXTRA FEATURES

LN	OB/XF CODE	DESCRIPTION	BLD	CAP	L	W	UNITS	UT	Adj R	ADJ UNIT PRICE	ORIG COND	YEAR ON	YEAR ACTUAL	Q	% COND	OB/XF MKT VALUE	NOTES
1	0500	FP-PRE FAB	0	100	0	0	1.00	UT	3,500.00	3,500.00	100	1996	1996	3	80	2,800	
2	0812	CONCRETE C	0	100	0	0	740.00	SF	4.00	4.00	100	1996	1996	3	73	2,161	
3	0810	CONCRETE A	0	100	0	0	139.00	SF	6.50	6.50	100	1996	1996	3	73	660	
4	0910	SCRN RM L	0	100	42	30	1,260.00	SF	15.00	15.00	100	1996	1996	3	20	3,780	
5	0810	CONCRETE A	0	100	0	0	55.00	SF	6.50	6.50	100	1996	1996	3	73	261	
6	0861	POOL GUNIT	0	100	0	0	378.00	SF	85.00	85.00	100	1996	1996	3	20	6,426	
7	0845	KOOL DECK	0	100	0	0	912.00	SF	7.25	7.25	100	1996	1996	3	73	4,827	
8	0811	CONCRETE B	0	100	0	0	621.00	SF	5.20	5.20	100	2003	2003	3	84	2,713	
9	0810	CONCRETE A	0	100	0	0	161.00	SF	6.50	6.50	100	2003	2003	3	84	879	
10	0825	BRICK	0	100	0	0	150.00	SF	12.50	12.50	100	2003	2003	3	96	1,800	

NASSAU COUNTY PROPERTY

PAGE 1 of 2 8

VALUATION SUMMARY

VALUATION BY		STANDARD
Tax Group: 8	Tax Dist:	
BUILDING MARKET VALUE		540,352
TOTAL MARKET OB/XF VALUE		33,702
TOTAL LAND VALUE - MARKET		250,000
TOTAL MARKET VALUE		824,054
SOH/AGL Deduction		449,377
ASSESSED VALUE		374,677
TOTAL EXEMPTION VALUE	HX HB VX VP WX	122,935
BASE TAXABLE VALUE		251,742
TOTAL JUST VALUE		824,054
NCON VALUE		0
INCOME VALUE		
PREVIOUS YEAR MKT VALUE		711,442

PERMIT NUM	DESCRIPTION	AMT	ISSUED
B0209537	FOUNDATION	6,000	04/01/2002
B9502482	XFOB	12,138	12/01/1995
B9502338	SWIM POOL	11,000	11/01/1995
B9502098	NEW CONSTR	166,000	07/01/1995

SALES DATA

OFF RECORD Number	DATE	TYPE INST	Q U	V I	RSN CD	SALE PRICE
0806/1148	9/16/1997	WD	U	I	07	100
GRANTOR: ATLANTIC BUILDERS						
GRANTEE: GERARDE DONALD R &						
0757/0063	4/16/1996	WD	U	V	06	100
GRANTOR: ATLANTIC BUILDERS INC						
GRANTEE: GERARDE DONALD & CO						

BUILDING NOTES

BUILDING DIMENSIONS

BAS=[YR=1996] W42 N14 W15 BAS=[YR=2003] N17 W5 FOP=[YR=2003] N6 W8 S6 E8 $ W13 S38 FOP=[YR=2003] S2 UOP=[YR=2003] W3 S7 E8 N5 SFB=[YR=2003] E13 N11 W5 N6 W6 S6 W3 S11 E1 $ W5 N2 $ S2 E4 N4 W4 $ E4 N7 E3 N6 E6 S6 E5 N14 $ S37 FGR=[YR=1996] S26 E22 N5 FOP=[YR=1996] E22N2 W2 N7 W7 S4 W13 S5$ N9 W1 N5 E1 N3 W10 FST=[YR=1996] N4 W6 S4 E6$ W6 N4 W6$ E12 S4 E10 S3 W1S5 E1 S4 E13 N4 E7 S7 E15 N42$ PTR = N15 FUS=[YR=2003] N38 W1 FOP=[YR=2003] N6 W16 S6 E16 $ W17 S38 E18 $ S15 $.

LAND DESCRIPTION

TOTAL OB/XF 26,307

LN	USE CODE	CLS	LAND USE DESCRIPTION	CAP	RD	LOC ZONE	FRONT	DEPTH	TOT LND UTS	UNIT TYPE	DT	DPTH FACT	% COND	TOT ADJ	UNIT PRICE	ADJ UNIT PRICE	LAND VALUE	OTHER ADJUSTMENTS AND NOTES	YEAR	DENSITY	DECL	FRZ	YR	CONSRV
1	000100	C	SFR	100		RS-1	0.00	0.00	1.00	LT		1.00	1.00	1.00	250,000.00	250,000.00	250,000							

REVIEW DATE 04/14/2020 BY DJA Total Acres: 0.00 Total Land Value: 250,000 Market: 0 Agricultural: 0 Common: 250,000 PRINTED 08/02/2023 BY SYS

LOT 24 & PT LOT 25 S-1
IN OR 806/1148
OCEAN WALK PB 5/373

GERARDE CORNELIA S
4991 SPANISH OAKS CIRCLE
FERNANDINA BEACH, FL 32034

2023

00-00-30-155W-0024-0000

BUILDING CHARACTERISTICS

ELEMENT	CD	CONSTRUCTION

DOR CODE	0100	SINGLE FAMILY	
MAP NUM		MKT AREA	03
NEIGHBORHOOD/LOC	3033.00		

AREA TYPE	TOTAL GROSS AREA	PCT OF BASE	TOT ADJ AREA	SUBAREA MARKET VALUE
TOTALS				

MARKET ADJUSTMENTS

TYPE	MDL	EFF. AREA	TOT ADJ PTS	EFF. BASE RATE	REPL. COST NEW	AYB	EYB	ECON	FNCT		NORM	% COND

BLD DATE	03/03/2023	NW	LGL DATE
XF DATE			LAND DATE
INC DATE			AG DATE

NASSAU COUNTY PROPERTY

PAGE 2 of 2 8

VALUATION SUMMARY

VALUATION BY		STANDARD
Tax Group: 8	Tax Dist:	
BUILDING MARKET VALUE		540,352
TOTAL MARKET OB/XF VALUE		33,702
TOTAL LAND VALUE - MARKET		250,000
TOTAL MARKET VALUE		824,054
SOH/AGL Deduction		449,377
ASSESSED VALUE		374,677
TOTAL EXEMPTION VALUE	HX HB VX VP WX	122,935
BASE TAXABLE VALUE		251,742
TOTAL JUST VALUE		824,054
NCON VALUE		0
INCOME VALUE		
PREVIOUS YEAR MKT VALUE		711,442

PERMIT NUM	DESCRIPTION	AMT	ISSUED

SALES DATA

OFF RECORD Number	DATE	TYPE INST	Q / U	V / I	RSN CD	SALE PRICE
0806/1148	9/16/1997	WD	U	I	07	100
GRANTOR: ATLANTIC BUILDERS						
GRANTEE: GERARDE DONALD R &						
0757/0063	4/16/1996	WD	U	V	06	100
GRANTOR: ATLANTIC BUILDERS INC						
GRANTEE: GERARDE DONALD & CO						

BUILDING NOTES

BUILDING DIMENSIONS

EXTRA FEATURES

LN	OB/XF CODE	DESCRIPTION	BLD	CAP	L	W	UNITS	UT	Adj R	ADJ UNIT PRICE	ORIG COND	YEAR ON	YEAR ACTUAL	Q	% COND	OB/XF MKT VALUE	NOTES
11	0825	BRICK	0	100	0	0	141.00	SF	12.50	12.50	100	2003	2003	3	96	1,692	
12	1075	TRELLIS G	0	100	13	13	169.00	SF	35.00	35.00	100	2003	2003	3	36	2,129	
13	0504	FP-ELECTRI	0	100	0	0	1.00	UT	2,000.00	2,000.00	100	2003	2003	3	88	1,760	
14	0835	QUARY TILE	0	100	0	0	216.00	SF	10.00	10.00	100	2003	2003	3	84	1,814	

LAND DESCRIPTION

TOTAL OB/XF 7,395

LN	USE CODE	CLS	LAND USE DESCRIPTION	CAP	RD	LOC ZONE	FRONT	DEPTH	TOT LND UTS	UNIT TYPE	DT	DPTH FACT	% COND	TOT ADJ	UNIT PRICE	ADJ UNIT PRICE	LAND VALUE	OTHER ADJUSTMENTS AND NOTES	YEAR	DENSITY	DECL	FRZ	YR	CONSRV

REVIEW DATE 04/14/2020 BY DJA Total Acres: 0.00 Total Land Value: 250,000 Market: 0 Agricultural: 0 Common: 250,000 PRINTED 08/02/2023 BY SYS