LOT 3
IN OR 1794/1218
VICTORIA LANDING PB 6/86

**EVANS ROBERT HENRY & MARTHA C REV TRUST**
4935 VICTORIA LANDING CT
FERNANDINA BEACH, FL 32034

**2023**

**00-00-30-087L-0003-0000**

## BUILDING CHARACTERISTICS

| ELEMENT | CD | CONSTRUCTION |
|---|---|---|
| Exterior Wall | 20 | FACE BRICK 60 |
| Exterior Wall | 16 | WD FR STUC 40 |
| Roof Structur | 08 | IRREGULAR 100 |
| Roof Cover | 03 | COMP SHNGL 100 |
| Interior Wall | 05 | DRYWALL 100 |
| Interior Floo | 12 | HARDWOOD 60 |
| Interior Floo | 14 | CARPET 40 |
| Air Condition | 03 | CENTRAL 100 |
| Heating Type | 04 | AIR DUCTED 100 |
| Bedrooms | | 4 100 |
| Bathrooms | | 3.5 100 |
| Frame | 02 | WOOD FRAME 100 |
| Stories | 2. | 2. 100 |
| Units | | 0 100 |
| Occupancy | 00 | NONE 100 |
| Quality | 03 | Quality Level 03 |
| DOR CODE | 0100 | SINGLE FAMILY |
| MAP NUM | | MKT AREA 03 |
| NEIGHBORHOOD/LOC | 3032.00 | |

| AREA TYPE | TOTAL GROSS AREA | PCT OF BASE | TOT ADJ AREA | SUBAREA MARKET VALUE |
|---|---|---|---|---|
| BAS | 941 | 100 | 941 | 94,339 |
| BAS | 2,916 | 100 | 2,916 | 292,341 |
| FDS | 143 | 75 | 107 | 10,727 |
| FGR | 872 | 55 | 480 | 48,122 |
| FOP | 52 | 30 | 16 | 1,604 |
| FOP | 378 | 30 | 113 | 11,329 |
| FOP | 487 | 30 | 146 | 14,637 |
| PTO | 20 | 5 | 1 | 100 |
| UOP | 54 | 20 | 11 | 1,103 |
| UOP | 142 | 20 | 28 | 2,807 |
| TOTALS | 6,519 | | 4,862 | 487,436 |

## MARKET ADJUSTMENTS

| TYPE | MDL | EFF. AREA | TOT ADJ PTS | EFF. BASE RATE | REPL. COST NEW | AYB | EYB | ECON | FNCT | | NORM | % COND |
|---|---|---|---|---|---|---|---|---|---|---|---|---|
| 0900 | 01 | 4,862 | 96.3200 | 114.38 | 556,116 | 2003 | 2003 | 0 | 0 | 0 | 12.35 | 87.65 |

1 SNGL FAM – 100% - 2014 Heated Area: 3857 HX Base Yr 2014

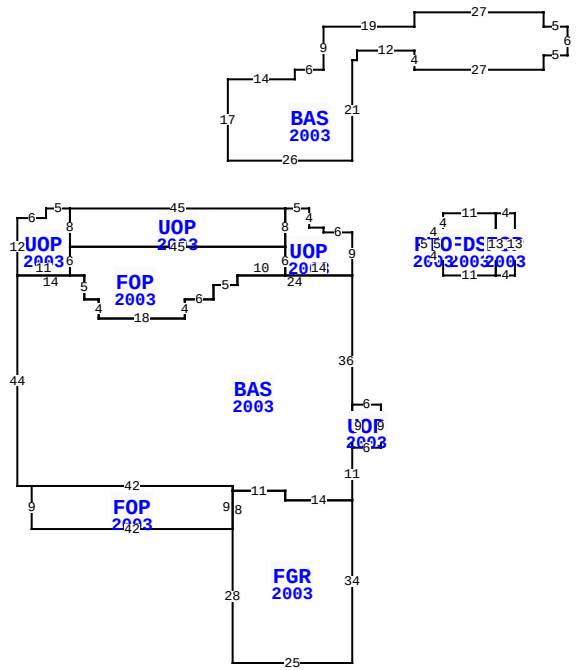


** This building has 12 Sub-Areas

4935 VICTORIA LANDING CT, FERNANDINA BEACH

| | | | |
|---|---|---|---|
| BLD DATE | | LGL DATE | |
| XF DATE | | LAND DATE | |
| INC DATE | | AG DATE | |

## NASSAU COUNTY PROPERTY

PAGE 1 of 1 8

### VALUATION SUMMARY

| | | |
|---|---|---|
| VALUATION BY | | STANDARD |
| Tax Group: 8 | Tax Dist: | |
| BUILDING MARKET VALUE | | 487,436 |
| TOTAL MARKET OB/XF VALUE | | 29,123 |
| TOTAL LAND VALUE - MARKET | | 150,000 |
| TOTAL MARKET VALUE | | 666,559 |
| SOH/AGL Deduction | | 334,580 |
| ASSESSED VALUE | | 331,979 |
| TOTAL EXEMPTION VALUE | HX HB | 50,000 |
| BASE TAXABLE VALUE | | 281,979 |
| TOTAL JUST VALUE | | 666,559 |
| NCON VALUE | | 0 |
| INCOME VALUE | | |
| PREVIOUS YEAR MKT VALUE | | 613,531 |

| PERMIT NUM | DESCRIPTION | AMT | ISSUED |
|---|---|---|---|
| B0412464 | XFOB | 6,759 | 03/01/2004 |
| R035104 | REPAIR/RRF | 7,000 | 05/01/2003 |
| R035105 | REPAIR/RRF | 900 | 05/01/2003 |
| B0210303 | XFOB | 5,900 | 10/01/2002 |
| B0210176 | NEW CONSTR | 400,000 | 09/01/2002 |

## SALES DATA

| OFF RECORD Number | DATE | TYPE INST | Q / U | V / I | RSN CD | SALE PRICE |
|---|---|---|---|---|---|---|
| 1794/1218 | 5/11/2012 | WD | U | I | 30 | 100 |
| GRANTOR: EVANS ROBERT & MARTHA | | | | | | |
| GRANTEE: THE ROBERT HENRY EV | | | | | | |
| 1794/1216 | 5/11/2012 | WD | U | I | 38 | 465,000 |
| GRANTOR: FLYNN JOHN R & MARILY | | | | | | |
| GRANTEE: EVANS ROBERT & MART | | | | | | |

## BUILDING NOTES

## EXTRA FEATURES

| LN | OB/XF CODE | DESCRIPTION | BLD | CAP | L | W | UNITS | UT | Adj R | ADJ UNIT PRICE | ORIG COND | YEAR ON | YEAR ACTUAL | Q | % COND | OB/XF MKT VALUE | NOTES |
|---|---|---|---|---|---|---|---|---|---|---|---|---|---|---|---|---|---|
| 1 | 0500 | FP-PRE FAB | 0 | 100 | 0 | 0 | 1.00 | UT | 3,500.00 | 3,500.00 | 100 | 2003 | 2003 | 3 | 88 | 3,080 | |
| 2 | 0812 | CONCRETE C | 0 | 100 | 0 | 0 | 3,072.00 | SF | 4.00 | 4.00 | 100 | 2003 | 2003 | 3 | 84 | 10,322 | |
| 3 | 0810 | CONCRETE A | 0 | 100 | 0 | 0 | 130.00 | SF | 6.50 | 6.50 | 100 | 2003 | 2003 | 3 | 84 | 710 | |
| 4 | 0825 | BRICK | 0 | 100 | 0 | 0 | 258.00 | SF | 12.50 | 12.50 | 100 | 2003 | 2003 | 3 | 96 | 3,096 | |
| 5 | 0825 | BRICK | 0 | 100 | 0 | 0 | 25.00 | SF | 12.50 | 12.50 | 100 | 2003 | 2003 | 3 | 96 | 300 | |
| 6 | 1127 | BRICK 8" | 0 | 100 | 0 | 0 | 70.00 | SF | 11.00 | 11.00 | 100 | 2003 | 2003 | 3 | 96 | 739 | |
| 7 | 0462 | ST/AL FNC | 0 | 100 | 0 | 0 | 2,601.00 | SF | 10.00 | 10.00 | 100 | 2003 | 2003 | 3 | 36 | 9,364 | |
| 8 | 0911 | SCRN RM A | 0 | 100 | 45 | 8 | 360.00 | SF | 17.50 | 17.50 | 100 | 2004 | 2004 | 3 | 24 | 1,512 | |

## BUILDING DIMENSIONS

BAS=[YR=2003;ORIG=-70,9] S44 E3 E42 S1 E11 S2 E14 N11 N36 W24 S2 W5 S3 W6 S4 W18 N4 W3 N5 W14 $
BAS=[YR=2003;ORIG=0,-15] N21 E1 N2 E12 S4 E27 N3 E5 N6 W5 N3 W27 S3 W19 S9 W6 S2 W14 S17 E26 $
FGR=[YR=2003;ORIG=-25,62] S28 E25 N34 W14 N2 W11 S8 $
FOP=[YR=2003;ORIG=-14,3] W45 S6 E3 S5 E3 S4 E18 N4 E6 N3 E5 N2 E10 N6 $
FOP=[YR=2003;ORIG=-67,53] S9 E42 N9 W42 $
UOP=[YR=2003;ORIG=-14,-5] W45 S8 E45 N8 $
UOP=[YR=2003;ORIG=0,0] W6 N1 W3 N4 W5 S8 S6 E14 N9 $
FDS=[YR=2003;ORIG=19,0] N4 E11 S13 W11 N9 $
UOP=[YR=2003;ORIG=-59,3] N8 W5 S2 W6 S12 E11 N6 $

## LAND DESCRIPTION

TOTAL OB/XF 29,123

| LN | USE CODE | CLS | LAND USE DESCRIPTION | CAP | RD | LOC ZONE | FRONT | DEPTH | TOT LND UTS | UNIT TYPE | DT | DPTH FACT | % COND | TOT ADJ | UNIT PRICE | ADJ UNIT PRICE | LAND VALUE | OTHER ADJUSTMENTS AND NOTES | YEAR | DENSITY | DECL | FRZ | YR | CONSRV |
|---|---|---|---|---|---|---|---|---|---|---|---|---|---|---|---|---|---|---|---|---|---|---|---|---|
| 1 | 000100 | C | SFR | 100 | | RS-1 | 0.00 | 0.00 | 1.00 | LT | | 1.00 | 1.00 | 1.00 | 150,000.00 | 150,000.00 | 150,000 | | | | | | | |

REVIEW DATE 06/26/2017 BY DJ Total Acres: 0.00 Total Land Value: 150,000 Market: 0 Agricultural: 0 Common: 150,000 PRINTED 08/02/2023 BY SYS