LOT 17 IN OR 893/1803
TIDEWATER @ OCEAN REACH #2
PB 6/105-106

TAPPE ELIZABETH P
5125 COPPER RIDGE DR APT 203
DURHAM, NC 27707-5594

2023

00-00-30-085U-0017-0000

BUILDING CHARACTERISTICS

ELEMENT	CD	CONSTRUCTION
Exterior Wall	16	WD FR STUC 100
Roof Structur	03	GABLE/HIP 100
Roof Cover	03	COMP SHNGL 100
Interior Wall	05	DRYWALL 100
Interior Floo	14	CARPET 80
Interior Floo	11	CLAY TILE 20
Air Condition	03	CENTRAL 100
Heating Type	04	AIR DUCTED 100
Bedrooms		4 100
Bathrooms		2 100
Frame	02	WOOD FRAME 100
Stories	1.	1. 100
Units		0 100
Occupancy	00	NONE 100
Quality	06	Quality Level 06

DOR CODE	0100	SINGLE FAMILY	
MAP NUM		MKT AREA	02
NEIGHBORHOOD/LOC	2031.00		

AREA TYPE	TOTAL GROSS AREA	PCT OF BASE	TOT ADJ AREA	SUBAREA MARKET VALUE
BAS	2,198	100	2,198	279,510
FGR	488	55	268	34,080
FOP	86	30	26	3,306
FOP	112	30	34	4,323
TOTALS	2,884		2,526	321,220

MARKET ADJUSTMENTS

TYPE	MDL	EFF. AREA	TOT ADJ PTS	EFF. BASE RATE	REPL. COST NEW	AYB	EYB	ECON	FNCT		NORM	% COND
0900	01	2,526	120.9984	143.69	362,961	1999	1999	0	0	0	11.50	88.50

1 SNGL FAM – 0% - 0 Heated Area: 2198 HX Base Yr

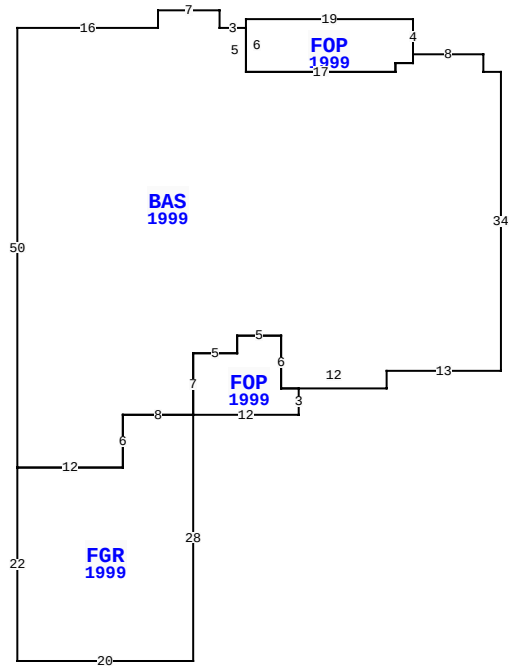

2935 TIDEWATER ST, FERNANDINA BEACH

BLD DATE		LGL DATE	
XF DATE		LAND DATE	
INC DATE		AG DATE	

NASSAU COUNTY PROPERTY

PAGE 1 of 1 8

VALUATION SUMMARY

VALUATION BY	STANDARD
Tax Group: 8	Tax Dist:
BUILDING MARKET VALUE	321,220
TOTAL MARKET OB/XF VALUE	8,712
TOTAL LAND VALUE - MARKET	180,000
TOTAL MARKET VALUE	509,932
SOH/AGL Deduction	95,620
ASSESSED VALUE	414,312
TOTAL EXEMPTION VALUE	0
BASE TAXABLE VALUE	414,312
TOTAL JUST VALUE	509,932
NCON VALUE	0
INCOME VALUE	
PREVIOUS YEAR MKT VALUE	491,117

PERMIT NUM	DESCRIPTION	AMT	ISSUED
B9905842	NEW CONSTR	108,250	03/01/1999

SALES DATA

OFF RECORD Number	DATE	TYPE INST	Q / U	V / I	RSN CD	SALE PRICE
0893/1803	8/04/1999	WD	Q	I		160,000
GRANTOR: PANITZ HOMES						
GRANTEE: TAPPE ELIZABETH P						
0864/0810	1/26/1999	WD	U	V	09	77,500
GRANTOR: OCEAN REACH JOINT VEN						
GRANTEE: BEAZER HOMES CORP D						

BUILDING NOTES

BUILDING DIMENSIONS

BAS=[YR=1999] W2 N2 W8 FOP=[YR=1999] N4 W19 S6 E17 N1 E2 N1 $ S1 W2 S1 W17 N5 W3 N2 W7 S2 W16 S50 FGR=[YR=1999] S22 E20 N28 FOP=[YR=1999] E12 N3 W2 N6 W5 S2 W5 S7 $ W8 S6 W12 $ E12 N6 E8 N7 E5 N2 E5 S6 E12 N2 E13 N34 $.

EXTRA FEATURES

L N	OB/XF CODE	DESCRIPTION	BLD	CAP	L	W	UNITS	UT	Adj R	ADJ UNIT PRICE	ORIG COND	YEAR ON	YEAR ACTUAL	Q	% COND	OB/XF MKT VALUE	NOTES
1	0500	FP-PRE FAB	0	0	0	0	1.00	UT	3,500.00	3,500.00	100	1999	1999	3	84	2,940	
2	0810	CONCRETE A	0	0	0	0	1,094.00	SF	6.50	6.50	100	1999	1999	3	79	5,618	
3	0810	CONCRETE A	0	0	10	3	30.00	SF	6.50	6.50	100	1999	1999	3	79	154	

LAND DESCRIPTION

TOTAL OB/XF 8,712

L N	USE CODE	CLS	LAND USE DESCRIPTION	CAP	R D	LOC ZONE	FRONT	DEPTH	TOT LND UTS	UNIT TYPE	D T	DPTH FACT	% COND	TOT ADJ	UNIT PRICE	ADJ UNIT PRICE	LAND VALUE	OTHER ADJUSTMENTS AND NOTES	YEAR	DENSITY	DECL	FRZ	YR	CONSRV
1	000100	C	SFR	0			0.00	0.00	1.00	LT		1.00	1.00	1.00	180,000.00	180,000.00	180,000							

REVIEW DATE 08/02/2022 BY KBA Total Acres: 0.00 Total Land Value: 180,000 Market: 0 Agricultural: 0 Common: 180,000 PRINTED 08/02/2023 BY SYS