LOT 9
TIDEWATER @ OCEAN REACH #2
PB 6/105-106

ORTEGA DONALD S & DEBORAH S
2936 TIDEWATER STREET
FERNANDINA BEACH, FL 32034

2023

00-00-30-085U-0009-0000

NASSAU COUNTY PROPERTY

BUILDING CHARACTERISTICS

ELEMENT	CD	CONSTRUCTION
Exterior Wall	16	WD FR STUC 100
Roof Structur	03	GABLE/HIP 100
Roof Cover	03	COMP SHNGL 100
Interior Wall	05	DRYWALL 100
Interior Floo	14	CARPET 80
Interior Floo	11	CLAY TILE 20
Air Condition	03	CENTRAL 100
Heating Type	04	AIR DUCTED 100
Bedrooms		4 100
Bathrooms		2 100
Frame	02	WOOD FRAME 100
Stories	1.	1. 100
Units		0 100
Occupancy	00	NONE 100
Quality	06	Quality Level 06
DOR CODE	0100	SINGLE FAMILY
MAP NUM		MKT AREA 02
NEIGHBORHOOD/LOC	2031.00	

AREA TYPE	TOTAL GROSS AREA	PCT OF BASE	TOT ADJ AREA	SUBAREA MARKET VALUE
BAS	2,119	100	2,119	277,076
FEP	224	80	179	23,406
FGR	467	55	257	33,604
FOP	10	30	3	392
FOP	72	30	22	2,877
PTO	314	5	16	2,092
TOTALS	3,206		2,596	339,447

MARKET ADJUSTMENTS

TYPE	MDL	EFF. AREA	TOT ADJ PTS	EFF. BASE RATE	REPL. COST NEW	AYB	EYB	ECON	FNCT		NORM	% COND
0900	01	2,596	120.9984	143.69	373,019	1999	2004	0	0	0	9.00	91.00

1 SNGL FAM – 100% - 2022 Heated Area: 2119 HX Base Yr 2022

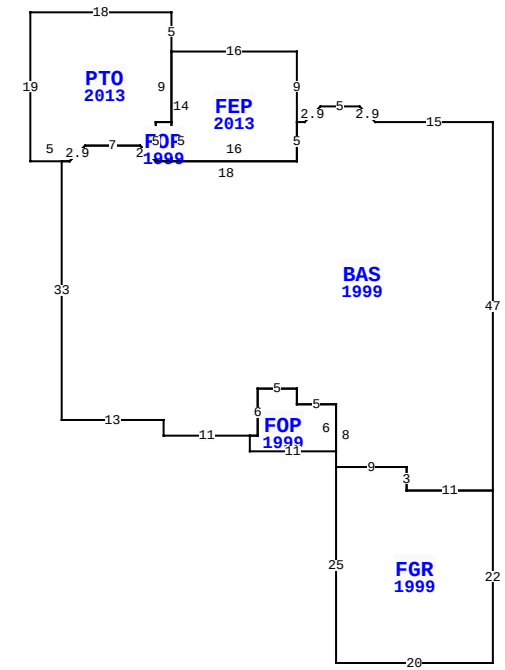

2936 TIDEWATER ST, FERNANDINA BEACH

BLD DATE		LGL DATE	
XF DATE		LAND DATE	
INC DATE		AG DATE	

VALUATION SUMMARY

VALUATION BY		STANDARD
Tax Group: 8	Tax Dist:	
BUILDING MARKET VALUE		339,447
TOTAL MARKET OB/XF VALUE		11,405
TOTAL LAND VALUE - MARKET		180,000
TOTAL MARKET VALUE		530,852
SOH/AGL Deduction		86,884
ASSESSED VALUE		443,968
TOTAL EXEMPTION VALUE	HX HB	50,000
BASE TAXABLE VALUE		393,968
TOTAL JUST VALUE		530,852
NCON VALUE		0
INCOME VALUE		
PREVIOUS YEAR MKT VALUE		510,678

PERMIT NUM	DESCRIPTION	AMT	ISSUED
B1327680	SCRROOF	8,997	09/01/2013
B9805386	NEW CONSTR	106,050	09/01/1998

SALES DATA

OFF RECORD Number	DATE	TYPE INST	Q / U	V / I	RSN CD	SALE PRICE
2522/1126	12/17/2021	WD	Q	I	02	585,000
GRANTOR: SCANLON CHARLES D & W						
GRANTEE: ORTEGA DONALD S & D						
0863/0648	1/19/1999	WD	Q	I		165,600
GRANTOR: BEAZER HOMES CORP D/B						
GRANTEE: SCANLON CHARLES D &						

BUILDING NOTES

BUILDING DIMENSIONS

BAS=[YR=1999] W15 U2 L2 W5 D2 L2 W1 FEP=[YR=2013] N9 W16 PTO=[YR=2013] N5 W18 S19 E5 U2 R2 E7 D2 R2 FOP=[YR=1999] N5E2S5W2$ N5 E2 N9$ S14 E16 N5$ S5 W18 U2 L2 W7 D2 L2 W1 S33 E13 S2 E11 FOP=[YR=1999] S2 E11 N6 W5 N2 W5 S6 W1 $ E1 N6 E5 S2 E5 S8 FGR=[YR=1999] S25 E20 N22 W11 N3 W9 $ E9 S3 E11 N47 $.

EXTRA FEATURES

LN	OB/XF CODE	DESCRIPTION	BLD	CAP	L	W	UNITS	UT	Adj R	ADJ UNIT PRICE	ORIG COND	YEAR ON	YEAR ACTUAL	Q	% COND	OB/XF MKT VALUE	NOTES
1	0500	FP-PRE FAB	0	100	0	0	1.00	UT	3,500.00	3,500.00	100	1999	1999	3	84	2,940	
2	0810	CONCRETE A	0	100	0	0	784.00	SF	6.50	6.50	100	1999	1999	3	79	4,026	
3	0810	CONCRETE A	0	100	9	3	27.00	SF	6.50	6.50	100	1999	1999	3	79	139	
4	0855	CONC PAVER	0	100	0	0	130.00	SF	7.00	7.00	100	2000	2000	3	80	728	
5	0911	SCRN RM A	0	100	0	0	314.00	SF	17.50	17.50	100	2013	2013	3	65	3,572	

LAND DESCRIPTION

TOTAL OB/XF 11,405

LN	USE CODE	CLS	LAND USE DESCRIPTION	CAP	RD	LOC ZONE	FRONT	DEPTH	TOT LND UTS	UNIT TYPE	DT	DPTH FACT	% COND	TOT ADJ	UNIT PRICE	ADJ UNIT PRICE	LAND VALUE	OTHER ADJUSTMENTS AND NOTES	YEAR	DENSITY	DECL	FRZ	YR	CONSRV
1	000133	C	SFR LAKE	100			0.00	0.00	1.00	LT		1.00	1.00	1.00	180,000.00	180,000.00	180,000							

REVIEW DATE 08/02/2022 BY KBA Total Acres: 0.00 Total Land Value: 180,000 Market: 0 Agricultural: 0 Common: 180,000 PRINTED 08/02/2023 BY SYS