LOT 7
IN OR 1862/220
& PT ABANDONED R/W RESOLUTION

YONN JARROD
806 ADAMS RD
FERNANDINA BEACH, FL 32034

2023

00-00-30-0840-0007-0000

NASSAU COUNTY PROPERTY

BUILDING CHARACTERISTICS

ELEMENT	CD	CONSTRUCTION
Exterior Wall	05	AVERAGE 100
Roof Structur	03	GABLE/HIP 100
Roof Cover	12	MODULAR MT 100
Interior Wall	05	DRYWALL 100
Interior Floo	13	LVT/LAMNT 80
Interior Floo	11	CLAY TILE 20
Air Condition	03	CENTRAL 100
Heating Type	04	AIR DUCTED 100
Bedrooms		2 100
Bathrooms		2 100
Frame	02	WOOD FRAME 100
Stories	1.	1. 100
Units		0 100
BUD8 Adjustme	05	DIST 1A 100
Occupancy	00	NONE 100
Quality	03	Quality Level 03
DOR CODE	0100	SINGLE FAMILY
MAP NUM		MKT AREA 02
NEIGHBORHOOD/LOC	2001.00	

AREA TYPE	TOTAL GROSS AREA	PCT OF BASE	TOT ADJ AREA	SUBAREA MARKET VALUE
BAS	1,481	100	1,481	131,174
FGR	532	55	293	25,951
FOP	597	30	179	15,854
PTO	27	5	1	88
PTO	28	5	1	88
TOTALS	2,665		1,955	173,157

MARKET ADJUSTMENTS

TYPE	MDL	EFF. AREA	TOT ADJ PTS	EFF. BASE RATE	REPL. COST NEW	AYB	EYB	ECON	FNCT		NORM	% COND
0100	01	1,955	109.9560	99.24	194,014	1966	2000	0	0	0	10.75	89.25

1 SINGLE FAM – 100% - 2014 Heated Area: 1481 HX Base Yr 2014

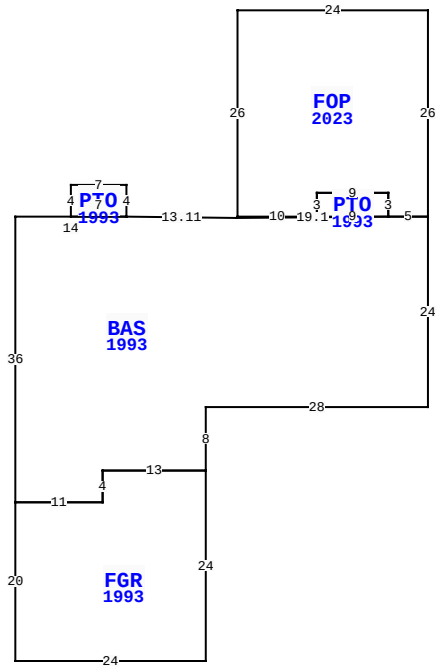

806 ADAMS RD, FERNANDINA BEACH

BLD DATE	09/19/2011 KK	LGL DATE	
XF DATE		LAND DATE	
INC DATE		AG DATE	

VALUATION SUMMARY

VALUATION BY		STANDARD
Tax Group: 8	Tax Dist:	
BUILDING MARKET VALUE		173,157
TOTAL MARKET OB/XF VALUE		770
TOTAL LAND VALUE - MARKET		120,000
TOTAL MARKET VALUE		293,927
SOH/AGL Deduction		142,757
ASSESSED VALUE		151,170
TOTAL EXEMPTION VALUE	HX HB	50,000
BASE TAXABLE VALUE		101,170
TOTAL JUST VALUE		293,927
NCON VALUE		31,093
INCOME VALUE		
PREVIOUS YEAR MKT VALUE		268,524

PERMIT NUM	DESCRIPTION	AMT	ISSUED
E973768	CHNGE SRVC	0	06/01/1997

SALES DATA

OFF RECORD Number	DATE	TYPE INST	Q U	V I	RSN CD	SALE PRICE
2511/1721	10/26/2021	QC	U	I	11	100
GRANTOR: YONN JARROD & ROBYN E						
GRANTEE: YONN JARROD						
1862/0220	6/14/2013	WD	Q	I	01	133,000
GRANTOR: BALL MARY T ETAL						
GRANTEE: YONN JARROD						

BUILDING NOTES

BUILDING DIMENSIONS

BAS=[YR=1993;ORIG=0,0] W5 D0.2L19.1 U0.2L13.11 W14 S36 E11 N4 E13 N8 E28 N24 $
FGR=[YR=1993;ORIG=-52,36] S20 E24 N24 W13 S4 W11 $
PTO=[YR=1993;ORIG=-38,0] N4 W7 S4 E7 $
PTO=[YR=1993;ORIG=-5,0] N3 W9 S3 E9 $
FOP=[YR=2023;ORIG=0,0] N26 W24 S26 E10 N3 E9 S3 E5 $
.

EXTRA FEATURES

LN	OB/XF CODE	DESCRIPTION	BLD	CAP	L	W	UNITS	UT	Adj R	ADJ UNIT PRICE	ORIG COND	YEAR ON	YEAR ACTUAL	Q	% COND	OB/XF MKT VALUE	NOTES
1	0810	CONCRETE A	0	100	19	19	361.00	SF	6.50	6.50	100	1966	1966	3	20	469	
2	0810	CONCRETE A	0	100	4	2	8.00	SF	6.50	6.50	100	1966	1966	3	20	10	
5	0810	CONCRETE A	0	100	14	4	56.00	SF	6.50	6.50	100	2000	2000	3	80	291	

LAND DESCRIPTION

TOTAL OB/XF 770

LN	USE CODE	CLS	LAND USE DESCRIPTION	CAP	RD	LOC ZONE	FRONT	DEPTH	TOT LND UTS	UNIT TYPE	DT	DPTH FACT	% COND	TOT ADJ	UNIT PRICE	ADJ UNIT PRICE	LAND VALUE	OTHER ADJUSTMENTS AND NOTES	YEAR	DENSITY	DECL	FRZ	YR	CONSRV
1	000100	C	SFR	100		RM	100.00	180.00	100.00	FF		1.00	1.00	1.00	1,200.00	1,200.00	120,000							

REVIEW DATE 07/21/2023 BY TWA Total Acres: 0.00 Total Land Value: 120,000 Market: 0 Agricultural: 0 Common: 120,000 PRINTED 08/02/2023 BY SYS