PT OF LOT 10 (S-4 & S-3)
IN OR 1726/610 & OR 1726/560
SUB OF SEC 30 PB 1/5

RUSHTON MITCHELL D JR & PAMELA
1734 CLINCH DRIVE
FERNANDINA BEACH, FL 32034

2023

00-00-30-0800-0010-0040

NASSAU COUNTY PROPERTY

BUILDING CHARACTERISTICS

ELEMENT	CD	CONSTRUCTION
Exterior Wall	05	AVERAGE 70
Exterior Wall	20	FACE BRICK 30
Roof Structur	03	GABLE/HIP 100
Roof Cover	03	COMP SHNGL 100
Interior Wall	05	DRYWALL 60
Interior Wall	04	PLYWOOD 40
Interior Floo	14	CARPET 70
Interior Floo	12	HARDWOOD 30
Air Condition	03	CENTRAL 100
Heating Type	04	AIR DUCTED 100
Bedrooms		3 100
Bathrooms		3 100
Frame	02	WOOD FRAME 100
Stories	1.5	1.5 100
Units		0 100
BUD8 Adjustme	05	DIST 1A 100
Occupancy	00	NONE 100
Quality	03	Quality Level 03
DOR CODE	0100	SINGLE FAMILY
MAP NUM		MKT AREA 02
NEIGHBORHOOD/LOC	2019.00	

AREA TYPE	TOTAL GROSS AREA	PCT OF BASE	TOT ADJ AREA	SUBAREA MARKET VALUE
BAS	1,480	100	1,480	112,977
FSP	160	40	64	4,886
FUS	712	100	712	54,351
UGR	672	45	302	23,054
TOTALS	3,024		2,558	195,267

MARKET ADJUSTMENTS

TYPE	MDL	EFF. AREA	TOT ADJ PTS	EFF. BASE RATE	REPL. COST NEW	AYB	EYB	ECON	FNCT		NORM	% COND
0100	01	2,558	105.0240	94.78	242,447	1948	1985	0	0	0	19.46	80.54

1 SINGLE FAM – 100% - 1994 Heated Area: 2192 HX Base Yr 1994

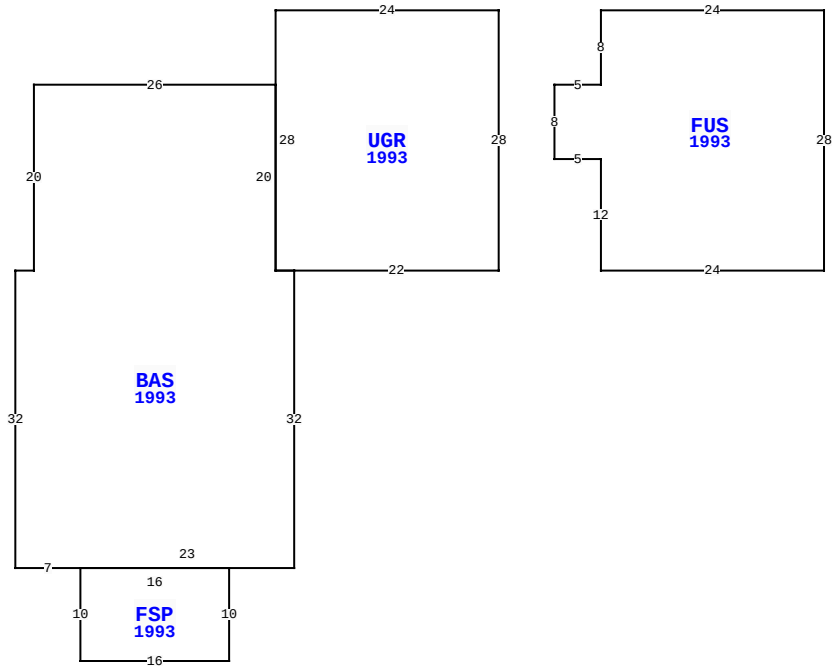

1722 CLINCH DR, FERNANDINA BEACH

BLD DATE		LGL DATE	
XF DATE		LAND DATE	
INC DATE		AG DATE	

VALUATION SUMMARY

VALUATION BY		STANDARD
Tax Group: 8	Tax Dist:	
BUILDING MARKET VALUE		333,550
TOTAL MARKET OB/XF VALUE		3,017
TOTAL LAND VALUE - MARKET		567,000
TOTAL MARKET VALUE		903,567
SOH/AGL Deduction		419,006
ASSESSED VALUE		484,561
TOTAL EXEMPTION VALUE	HX HB	50,000
BASE TAXABLE VALUE		434,561
TOTAL JUST VALUE		903,567
NCON VALUE		0
INCOME VALUE		
PREVIOUS YEAR MKT VALUE		902,538

PERMIT NUM	DESCRIPTION	AMT	ISSUED
B1313538	ROOF	4,000	06/01/2013
0634	H/AC	3,160	06/01/1994
3884	N/A	7,776	02/18/1987

SALES DATA

OFF RECORD Number	DATE	TYPE INST	Q / U	V / I	RSN CD	SALE PRICE
1726/0610	2/22/2011	QC	U	I	11	100
GRANTOR: RUSHTON MITCHELL D JR						
GRANTEE: RUSHTON MITCHELL D						
1543/1269	12/31/2007	QC	U	I	01	100
GRANTOR: RUSHTON MITCHELL DEE						
GRANTEE: RUSHTON MITCHELL DE						

BUILDING NOTES

BUILDING DIMENSIONS

BAS=[YR=1993] W26 S20 W2 S32 E7 FSP=[YR=1993] S10 E16 N10 W16$ E23 N32UGR=[YR=1993] E22 N28 W24 S28 E2$ W2N20$ PTR= E30 FUS=[YR=1993] E5 N8 E24 S28 W24 N12 W5 N8$ W30$.

EXTRA FEATURES

LN	OB/XF CODE	DESCRIPTION	BLD	CAP	L	W	UNITS	UT	Adj R	ADJ UNIT PRICE	ORIG COND	YEAR ON	YEAR ACTUAL	Q	% COND	OB/XF MKT VALUE	NOTES
1	1242	WD DECK A	0	100	10	8	80.00	SF	10.00	10.00	100	1988	1988	3	20	160	
3	0940	SHEDS/PORT	0	100	13	10	130.00	SF	30.00	30.00	100	2007	2007	3	35	1,365	
4	0500	FP-PRE FAB	0	100	0	0	1.00	UT	3,500.00	3,500.00	100	1948	1948	3	20	700	
5	1242	WD DECK A	0	100	11	12	132.00	SF	10.00	10.00	100	2012	2012	3	60	792	

LAND DESCRIPTION

TOTAL OB/XF 3,017

LN	USE CODE	CLS	LAND USE DESCRIPTION	CAP	RD	LOC ZONE	FRONT	DEPTH	TOT LND UTS	UNIT TYPE	DT	DPTH FACT	% COND	TOT ADJ	UNIT PRICE	ADJ UNIT PRICE	LAND VALUE	OTHER ADJUSTMENTS AND NOTES	YEAR	DENSITY	DECL	FRZ	YR	CONSRV
1	000115	C	SFR ACRES	100	0006	RS-2	0.00	0.00	2.30	AC		1.00	1.00	1.00	90,000.00	90,000.00	207,000							
2	000115	C	SFR ACRES	100	0006	RS-2	0.00	0.00	4.00	AC		1.00	1.00	1.00	90,000.00	90,000.00	360,000							

REVIEW DATE 01/14/2021 BY TWA Total Acres: 6.30 Total Land Value: 567,000 Market: 0 Agricultural: 0 Common: 567,000 PRINTED 08/02/2023 BY SYS

PT OF LOT 10 (S-4 & S-3)
IN OR 1726/610 & OR 1726/560
SUB OF SEC 30 PB 1/5

RUSHTON MITCHELL D JR & PAMELA
1734 CLINCH DRIVE
FERNANDINA BEACH, FL 32034

2023

00-00-30-0800-0010-0040

NASSAU COUNTY PROPERTY

BUILDING CHARACTERISTICS

ELEMENT	CD	CONSTRUCTION
Exterior Wall	05	AVERAGE 100
Roof Structur	03	GABLE/HIP 100
Roof Cover	03	COMP SHNGL 100
Interior Wall	05	DRYWALL 100
Interior Floo	12	HARDWOOD 70
Interior Floo	07	CORK/VTILE 30
Air Condition	03	CENTRAL 100
Heating Type	04	AIR DUCTED 100
Bedrooms		3 100
Bathrooms		1 100
Frame	02	WOOD FRAME 100
Stories	1.	1. 100
Units		0 100
BUD8 Adjustme	05	DIST 1A 100
Occupancy	00	NONE 100
Quality	03	Quality Level 03
DOR CODE	0100	SINGLE FAMILY
MAP NUM		MKT AREA 02
NEIGHBORHOOD/LOC	2019.00	

AREA TYPE	TOTAL GROSS AREA	PCT OF BASE	TOT ADJ AREA	SUBAREA MARKET VALUE
BAS	1,582	100	1,582	124,580
DCK	100	10	10	787
DCK	196	10	20	1,575
FEP	180	80	144	11,340
TOTALS	2,058		1,756	138,283

MARKET ADJUSTMENTS

TYPE	MDL	EFF. AREA	TOT ADJ PTS	EFF. BASE RATE	REPL. COST NEW	AYB	EYB	ECON	FNCT		NORM	% COND
0100	01	1,756	104.5000	94.31	165,608	1948	1985	0	0	0	16.50	83.50

2 SINGLE FAM – 0% - 1994 Heated Area: 1582 HX Base Yr 1994

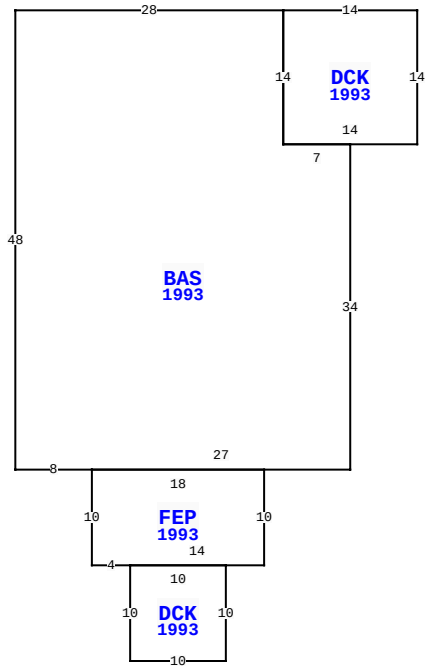

1722 CLINCH DR, FERNANDINA BEACH

BLD DATE		LGL DATE	
XF DATE		LAND DATE	
INC DATE		AG DATE	

NASSAU COUNTY PROPERTY — VALUATION SUMMARY

VALUATION BY		STANDARD
Tax Group: 8	Tax Dist:	
BUILDING MARKET VALUE		333,550
TOTAL MARKET OB/XF VALUE		3,017
TOTAL LAND VALUE - MARKET		567,000
TOTAL MARKET VALUE		903,567
SOH/AGL Deduction		419,006
ASSESSED VALUE		484,561
TOTAL EXEMPTION VALUE	HX HB	50,000
BASE TAXABLE VALUE		434,561
TOTAL JUST VALUE		903,567
NCON VALUE		0
INCOME VALUE		
PREVIOUS YEAR MKT VALUE		902,538

PERMIT NUM	DESCRIPTION	AMT	ISSUED

SALES DATA

OFF RECORD Number	DATE	TYPE INST	Q / U	V / I	RSN CD	SALE PRICE
1726/0610	2/22/2011	QC	U	I	11	100
GRANTOR: RUSHTON MITCHELL D JR						
GRANTEE: RUSHTON MITCHELL D						
1543/1269	12/31/2007	QC	U	I	01	100
GRANTOR: RUSHTON MITCHELL DEE						
GRANTEE: RUSHTON MITCHELL DE						

BUILDING NOTES

BUILDING DIMENSIONS

DCK=[YR=1993] W14 BAS=[YR=1993] W28 S48 E8 FEP=[YR=1993] S10 E4 DCK=[YR=1993] S10 E10 N10 W10$ E14 N10 W18$ E27 N34 W7 N14$ S14 E14 N14$.

EXTRA FEATURES

LN	OB/XF CODE	DESCRIPTION	BLD	CAP	L	W	UNITS	UT	Adj R	ADJ UNIT PRICE	ORIG COND	YEAR ON	YEAR ACTUAL	Q	% COND	OB/XF MKT VALUE	NOTES

LAND DESCRIPTION

TOTAL OB/XF 0

LN	USE CODE	CLS	LAND USE DESCRIPTION	CAP	RD	LOC ZONE	FRONT	DEPTH	TOT LND UTS	UNIT TYPE	DT	DPTH FACT	% COND	TOT ADJ	UNIT PRICE	ADJ UNIT PRICE	LAND VALUE	OTHER ADJUSTMENTS AND NOTES	YEAR	DENSITY	DECL	FRZ	YR	CONSRV

REVIEW DATE 01/14/2021 BY TWA Total Acres: 6.30 Total Land Value: 567,000 Market: 0 Agricultural: 0 Common: 567,000 PRINTED 08/02/2023 BY SYS