LOT 8 (EX PT OR 2201/1671)
QUATTLEFIELD LANE PBK 8/189

CALDWELL GREGORY R & ALICE A
1300 QUATTLEFIELD LANE
FERNANDINA BEACH, FL 32034

2023

00-00-30-0761-0008-0000

BUILDING CHARACTERISTICS

ELEMENT	CD	CONSTRUCTION
Exterior Wall	10	ABOVE AVG 80
Exterior Wall	12	CEDAR 20
Roof Structur	08	IRREGULAR 100
Roof Cover	03	COMP SHNGL 100
Interior Wall	05	DRYWALL 100
Interior Floo	11	CLAY TILE 70
Interior Floo	14	CARPET 30
Air Condition	03	CENTRAL 100
Heating Type	04	AIR DUCTED 100
Bedrooms		5 100
Bathrooms		4 100
Frame	02	WOOD FRAME 100
Stories	2.	2. 100
Units		0 100
Occupancy	00	NONE 100
Quality	04	Quality Level 04
DOR CODE	0100	SINGLE FAMILY
MAP NUM		MKT AREA 03
NEIGHBORHOOD/LOC	3050.00	

AREA TYPE	TOTAL GROSS AREA	PCT OF BASE	TOT ADJ AREA	SUBAREA MARKET VALUE
BAS	2,543	100	2,543	412,163
FGR	965	55	531	86,063
FOP	180	30	54	8,753
FOP	323	30	97	15,721
FUS	379	100	379	61,428
STR	44	10	4	649
TOTALS	4,434		3,608	584,775

MARKET ADJUSTMENTS

TYPE	MDL	EFF. AREA	TOT ADJ PTS	EFF. BASE RATE	REPL. COST NEW	AYB	EYB	ECON	FNCT		NORM	% COND
0500	01	3,608	115.0065	163.88	591,279	2019	2019	0	0	0	1.10	98.90

1 SFR CUST – 100% - 2020 Heated Area: 2922 HX Base Yr 2020

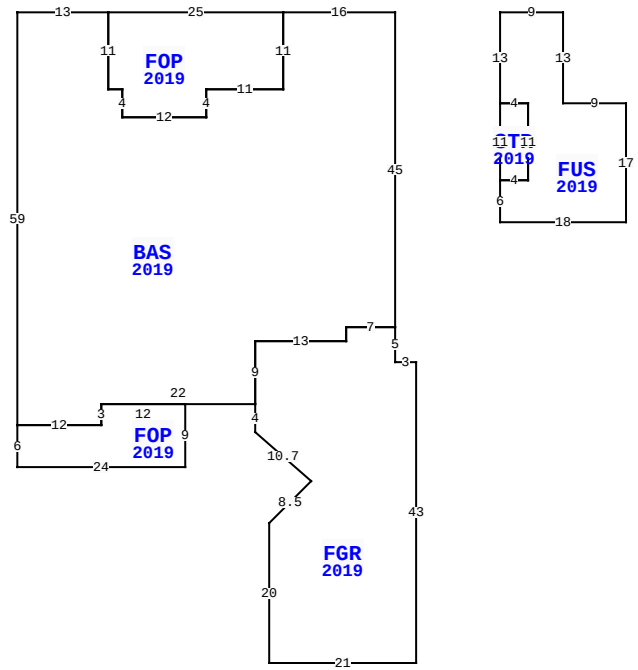

1300 QUATTLEFIELD LN, FERNANDINA BEACH

BLD DATE		LGL DATE	
XF DATE		LAND DATE	
INC DATE		AG DATE	

NASSAU COUNTY PROPERTY

PAGE 1 of 1 8

VALUATION SUMMARY

VALUATION BY		STANDARD
Tax Group: 8	Tax Dist:	
BUILDING MARKET VALUE		584,775
TOTAL MARKET OB/XF VALUE		24,087
TOTAL LAND VALUE - MARKET		300,000
TOTAL MARKET VALUE		908,862
SOH/AGL Deduction		194,913
ASSESSED VALUE		713,949
TOTAL EXEMPTION VALUE	HX HB	50,000
BASE TAXABLE VALUE		663,949
TOTAL JUST VALUE		908,862
NCON VALUE		0
INCOME VALUE		
PREVIOUS YEAR MKT VALUE		744,081

PERMIT NUM	DESCRIPTION	AMT	ISSUED
B1807706	NEW CONSTR	405,453	07/30/2018

SALES DATA

OFF RECORD Number	DATE	TYPE INST	Q U	V I	RSN CD	SALE PRICE
2287/0208	6/18/2019	SW	Q	I	01	790,000
GRANTOR: W R HOWELL COMPANY						
GRANTEE: CALDWELL GREGORY R						
2222/1489	9/11/2018	WD	U	V	30	220,000
GRANTOR: QUATTLEFIELD PROPERTI						
GRANTEE: W R HOWELL COMPANY						

BUILDING NOTES

BUILDING DIMENSIONS

BAS=[YR=2019] W16 FOP=[YR=2019] W25 S11 E2 S4 E12 N4 E11 N11$ S11 W11 S4 W12 N4 W2 N11 W13 S59 FOP=[YR=2019] S6 E24 N9 W12 S3 W12$ E12 N3 E22 FGR=[YR=2019] S4 D7 R8 D6 L6 S20 E21 N43 W3 N5 W7 S2 W13 S9 $ N9 E13 N2 E7 N45$ PTR=E15 FUS=[YR=2019] E9 S13 E9 S17 W18 N6 STR=[YR=2019] N11 E4 S11 W4$ E4 N11 W4 N13$ W15$.

EXTRA FEATURES

LN	OB/XF CODE	DESCRIPTION	BLD	CAP	L	W	UNITS	UT	Adj R	ADJ UNIT PRICE	ORIG COND	YEAR ON	YEAR ACTUAL	Q	% COND	OB/XF MKT VALUE	NOTES
1	0504	FP-ELECTRI	0	100	0	0	1.00	UT	2,000.00	2,000.00	100	2019	2019	3	99	1,980	
2	0855	CONC PAVER	0	100	0	0	2,216.00	SF	7.00	7.00	100	2019	2019	3	99	15,357	
3	0600	SUMMER KIT	0	100	0	0	1.00	UT	7,500.00	7,500.00	100	2019	2019	3	90	6,750	

LAND DESCRIPTION

TOTAL OB/XF 24,087

LN	USE CODE	CLS	LAND USE DESCRIPTION	CAP	RD	LOC ZONE	FRONT	DEPTH	TOT LND UTS	UNIT TYPE	DT	DPTH FACT	% COND	TOT ADJ	UNIT PRICE	ADJ UNIT PRICE	LAND VALUE	OTHER ADJUSTMENTS AND NOTES	YEAR	DENSITY	DECL	FRZ	YR	CONSRV
1	000100	C	SFR	100			0.00	0.00	1.00	LT		1.00	1.00	1.00	300,000.00	300,000.00	300,000							

REVIEW DATE 06/11/2019 BY DJ Total Acres: 0.00 Total Land Value: 300,000 Market: 0 Agricultural: 0 Common: 300,000 PRINTED 08/02/2023 BY SYS