LOT 2 & PT OF LOT 1
IN OR 2277/1932
QUATTLEFIELD LANE PBK 8/189

GREENE DOUGLAS H S REV TRUST/GREENE DOUGLAS H S TR
1284 QUATTLEFIELD LANE
FERNANDINA BEACH, FL 32034

2023

00-00-30-0761-0002-0000

NASSAU COUNTY PROPERTY

BUILDING CHARACTERISTICS

ELEMENT	CD	CONSTRUCTION
Exterior Wall	19	COMMON BRK 100
Roof Structur	08	IRREGULAR 100
Roof Cover	13	STAND SEAM 100
Interior Wall	05	DRYWALL 100
Interior Floo	12	HARDWOOD 70
Interior Floo	11	CLAY TILE 30
Air Condition	03	CENTRAL 100
Heating Type	04	AIR DUCTED 100
Bedrooms		5 100
Bathrooms		4 100
Frame	02	WOOD FRAME 100
Stories	2.	2. 100
Units		0 100
Quality	06	Quality Level 06
DOR CODE	0100	SINGLE FAMILY
MAP NUM		MKT AREA 03
NEIGHBORHOOD/LOC	3050.00	

AREA TYPE	TOTAL GROSS AREA	PCT OF BASE	TOT ADJ AREA	SUBAREA MARKET VALUE
BAS	3,515	100	3,515	916,986
FDG	576	60	346	90,263
FGR	792	55	436	113,742
FOP	40	30	12	3,130
FOP	105	30	32	8,348
FOP	287	30	86	22,435
FOP	357	30	107	27,914
FSP	162	40	65	16,957
FUS	604	100	604	157,570
FUS	1,048	100	1,048	273,400
TOTALS	7,695		6,271	1,635,965

MARKET ADJUSTMENTS

TYPE	MDL	EFF. AREA	TOT ADJ PTS	EFF. BASE RATE	REPL. COST NEW	AYB	EYB	ECON	FNCT		NORM	% COND
0500	11	6,271	185.3868	264.18	1,656,673	2021	2021	0	0	0	1.25	98.75

1 SFR CUST – 100% - 2022 Heated Area: 5167 HX Base Yr 2022

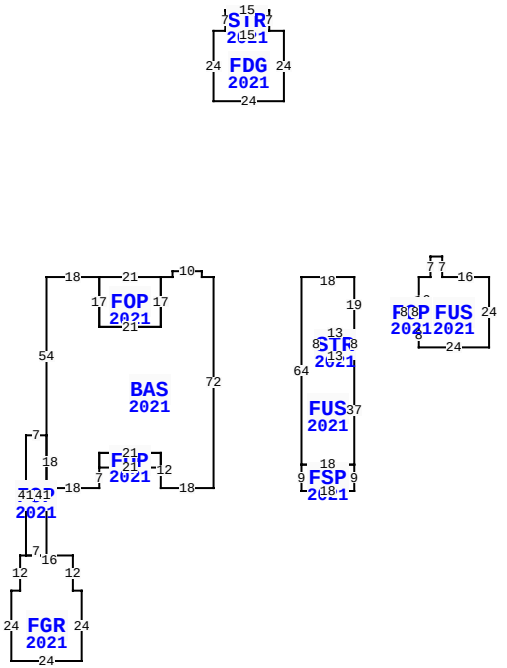

** This building has 12 Sub-Areas

1284 QUATTLEFIELD LN, FERNANDINA BEACH

BLD DATE		LGL DATE	
XF DATE		LAND DATE	
INC DATE		AG DATE	

VALUATION SUMMARY

VALUATION BY		STANDARD
Tax Group: 8	Tax Dist:	
BUILDING MARKET VALUE		1,635,965
TOTAL MARKET OB/XF VALUE		113,088
TOTAL LAND VALUE - MARKET		900,000
TOTAL MARKET VALUE		2,649,053
SOH/AGL Deduction		920,037
ASSESSED VALUE		1,729,016
TOTAL EXEMPTION VALUE	HX HB	50,000
BASE TAXABLE VALUE		1,679,016
TOTAL JUST VALUE		2,649,053
NCON VALUE		0
INCOME VALUE		
PREVIOUS YEAR MKT VALUE		2,178,656

PERMIT NUM	DESCRIPTION	AMT	ISSUED
20211649	CO ISSUED	0	08/01/2021
20211801	SWIM POOL	0	03/01/2021
20004293	SWIM POOL	100,000	06/01/2020
20002843	NEW CONSTR	746,277	04/01/2020
20002844	SMALL HOUSE	125,291	04/01/2020

SALES DATA

OFF RECORD Number	DATE	TYPE INST	Q / U	V / I	RSN CD	SALE PRICE
2277/1932	5/28/2019	WD	Q	V	01	900,000

GRANTOR: QUATTLEFIELD PROPERTI

GRANTEE: GREENE DOUGLAS H S

BUILDING NOTES

BUILDING DIMENSIONS

BAS=[YR=2021] W4 N2 W10 S2 W4 FOP=[YR=2021] W21 S17 E21 N17 $ S17 W21 N17 W18 S54 FOP=[YR=2021] W7 S41 FGR=[YR=2021] W2 S12 W3 S24 E24 N24 W3 N12 W16 $ E7 N41$ S18 E18 N7 FOP=[YR=2021] E21 N5 W21 S5 $ N5 E21 S12 E18 N72 $ PTR= E30 FUS=[YR=2021] E18 S19 STR=[YR=2021] W13 S8 E13 N8 $ W13 S8 E13 S37 FSP=[YR=2021] S9 W18 N9 E18 $ W18 N64 $ W30$ PTR= N60 FDG=[YR=2021] N24 E4 STR=[YR=2021] N7 E15 S7 W15 $ E20 S24 W24$ S60 PTR= E70 FUS=[YR=2021] E4 N7 E4 S7 E16 S24 W24 N8 FOP=[YR=2021] W5 N8 E5 S8$ N16 $W70 $.

EXTRA FEATURES

L N	OB/XF CODE	DESCRIPTION	BLD	CAP	L	W	UNITS	UT	Adj R	ADJ UNIT PRICE	ORIG COND	YEAR ON	YEAR ACTUAL	Q	% COND	OB/XF MKT VALUE	NOTES
1	0409	ELEVATOR R	0	100	0	0	1.00	UT	10,200.00	10,200.00	100	2021	2021	3	100	10,200	
2	0855	CONC PAVER	0	100	0	0	2,750.00	SF	10.00	10.00	100	2021	2021	3	100	27,500	
3	0910	SCRN RM L	0	100	0	0	1,516.00	SF	15.00	15.00	100	2021	2021	3	97	22,058	
4	0861	POOL GUNIT	0	100	0	0	432.00	SF	85.00	85.00	100	2021	2021	3	98	35,986	
5	0857	SANDSTONE	0	100	0	0	1,084.00	SF	16.00	16.00	100	2021	2021	3	100	17,344	

LAND DESCRIPTION

TOTAL OB/XF 113,088

L N	USE CODE	CLS	LAND USE DESCRIPTION	CAP	R D	LOC ZONE	FRONT	DEPTH	TOT LND UTS	UNIT TYPE	D T	DPTH FACT	% COND	TOT ADJ	UNIT PRICE	ADJ UNIT PRICE	LAND VALUE	OTHER ADJUSTMENTS AND NOTES	YEAR	DENSITY	DECL	FRZ	YR	CONSRV
1	000132	C	SFR RIVER	100			0.00	0.00	1.00	LT		1.00	1.00	1.00	900,000.00	900,000.00	900,000							

REVIEW DATE 10/19/2021 BY RK Total Acres: 0.00 Total Land Value: 900,000 Market: 0 Agricultural: 0 Common: 900,000 PRINTED 08/02/2023 BY SYS