PT OF LOT 5
IN OR 2616/1203
ESMT IN OR 447/570

SLEIMAN OLIVIA JANE/MANNING MARCUS BRADLEY
1365 MANUCY ROAD
FERNANDINA BEACH, FL 32034

2023

00-00-30-0760-0005-0070

NASSAU COUNTY PROPERTY

BUILDING CHARACTERISTICS

ELEMENT	CD	CONSTRUCTION
Exterior Wall	16	WD FR STUC 100
Roof Structur	03	GABLE/HIP 100
Roof Cover	11	SLATE 100
Interior Wall	05	DRYWALL 100
Interior Floo	11	CLAY TILE 50
Interior Floo	14	CARPET 50
Air Condition	03	CENTRAL 100
Heating Type	04	AIR DUCTED 100
Bedrooms		4 100
Bathrooms		3 100
Frame	02	WOOD FRAME 100
Stories	2.	2. 100
Units		0 100
Occupancy	00	NONE 100
Quality	04	Quality Level 04
DOR CODE	0100	SINGLE FAMILY
MAP NUM		MKT AREA 03
NEIGHBORHOOD/LOC	3027.00	

AREA TYPE	TOTAL GROSS AREA	PCT OF BASE	TOT ADJ AREA	SUBAREA MARKET VALUE
BAS	1,072	100	1,072	165,405
BAS	420	100	420	64,805
BAS	194	100	194	29,933
FCP	504	25	126	19,441
FOP	32	30	10	1,543
FOP	68	30	20	3,086
FOP	132	30	40	6,172
FST	168	55	92	14,195
FUS	1,414	100	1,414	218,175
UOP	25	20	5	771
TOTALS	4,347		3,456	533,248

MARKET ADJUSTMENTS

TYPE	MDL	EFF. AREA	TOT ADJ PTS	EFF. BASE RATE	REPL. COST NEW	AYB	EYB	ECON	FNCT		NORM	% COND
0500	01	3,456	118.3350	168.63	582,785	2005	2005	0	0	0	8.50	91.50

1 SFR CUST – 100% - 0 Heated Area: 3100 HX Base Yr

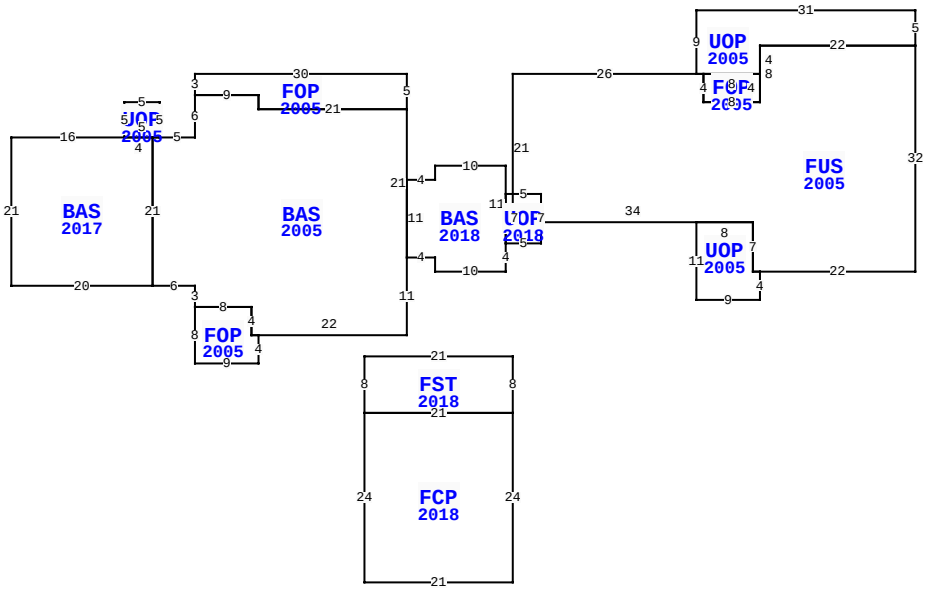

** This building has 13 Sub-Areas

1365 MANUCY RD, FERNANDINA BEACH

BLD DATE		LGL DATE	
XF DATE		LAND DATE	
INC DATE		AG DATE	

VALUATION SUMMARY

VALUATION BY		STANDARD
Tax Group: 8	Tax Dist:	
BUILDING MARKET VALUE		533,248
TOTAL MARKET OB/XF VALUE		31,917
TOTAL LAND VALUE - MARKET		250,000
TOTAL MARKET VALUE		815,165
SOH/AGL Deduction		146,458
ASSESSED VALUE		668,707
TOTAL EXEMPTION VALUE	HX HB	50,000
BASE TAXABLE VALUE		618,707
TOTAL JUST VALUE		815,165
NCON VALUE		0
INCOME VALUE		
PREVIOUS YEAR MKT VALUE		649,230

PERMIT NUM	DESCRIPTION	AMT	ISSUED
B180355	ADDITION	19,745	01/12/2018
B180357	ADDITION	22,068	01/12/2018
B1632212	ADDITION	0	05/02/2016
B0412238	NEW CONSTR	200,000	01/01/2004
R045794	REPAIR/RRF	6,500	01/01/2004

SALES DATA

OFF RECORD Number	DATE	TYPE INST	Q / U	V / I	RSN CD	SALE PRICE
2616/1203	1/25/2023	WD	Q	I	01	1,050,000
GRANTOR: BLAZEK RICHARD E & CA						
GRANTEE: SLEIMAN OLIVIA JANE						
2387/1019	8/27/2020	WD	Q	I	01	860,000
GRANTOR: REITZER JOEL V JR & J						
GRANTEE: BLAZEK RICHARD E &						

BUILDING NOTES

BUILDING DIMENSIONS

FOP=[YR=2005] W30 S3 BAS=[YR=2005] S6 W5 UOP=[YR=2005] N5 W5 S5 BAS=[YR=2017] W16 S21 E20 N21 W4 $ E5 $ W1 S21 E6 S3 FOP=[YR=2005] S8 E9 N4 W1 N4 W8 $ E8 S4 E22 N11 BAS=[YR=2018] E4 S2 E10 N4 UOP=[YR=2018] E5 N7 W5 S7$ N11 W10 S2 W4 S11$ N21 W21 N2 W9 $ E9 S2 E21 N5 $ PTR= E15 FUS=[YR=2005] E26 UOP=[YR=2005] N9 E31 S5 W22 S4 FOP=[YR=2005] S4 W8 N4 E8 $ W9 $ E1S4 E8 N8 E22 S32 W22 UOP=[YR=2005] S4 W9 N11 E8 S7 E1 $ W1 N7 W34N21 $ W15 $ PTR= E15 S40 FST=[YR=2018] W21 S8 FCP=[YR=2018] S24 E21 N24 W21$ E21 N8$ N40 W15$.

EXTRA FEATURES

LN	OB/XF CODE	DESCRIPTION	BLD	CAP	L	W	UNITS	UT	Adj R	ADJ UNIT PRICE	ORIG COND	YEAR ON	YEAR ACTUAL	Q	% COND	OB/XF MKT VALUE	NOTES
1	0812	CONCRETE C	0	100	0	0	3,032.00	SF	4.00	4.00	100	2005	2005	3	87	10,551	
2	0810	CONCRETE A	0	100	9	6	54.00	SF	6.50	6.50	100	2005	2005	3	87	305	
3	0810	CONCRETE A	0	100	12	16	192.00	SF	6.50	6.50	100	2005	2005	3	87	1,086	
4	0810	CONCRETE A	0	100	10	4	40.00	SF	6.50	6.50	100	2005	2005	3	87	226	
5	0811	CONCRETE B	0	100	0	0	564.00	SF	5.20	5.20	100	2005	2005	3	87	2,552	
6	0810	CONCRETE A	0	100	0	0	75.00	SF	6.50	6.50	100	2005	2005	3	87	424	
7	0462	ST/AL FNC	0	100	0	0	125.00	SF	10.00	10.00	100	2016	2016	3	84	1,050	
8	1242	WD DECK A	0	100	0	0	452.00	SF	10.00	10.00	100	2016	2016	3	78	3,526	
9	0940	SHEDS/PORT	0	100	16	12	192.00	SF	30.00	30.00	100	2016	2016	3	78	4,493	
10	0855	CONC PAVER	0	100	0	0	1,123.00	SF	7.00	7.00	100	2018	2018	3	98	7,704	

TOTAL OB/XF 31,917

LAND DESCRIPTION

LN	USE CODE	CLS	LAND USE DESCRIPTION	CAP	RD	LOC ZONE	FRONT	DEPTH	TOT LND UTS	UNIT TYPE	DT	DPTH FACT	% COND	TOT ADJ	UNIT PRICE	ADJ UNIT PRICE	LAND VALUE	OTHER ADJUSTMENTS AND NOTES	YEAR	DENSITY	DECL	FRZ	YR	CONSRV
1	000100	C	SFR	100		RS-1	109.00	210.00	1.00	UT		1.00	1.00	1.00	250,000.00	250,000.00	250,000							

REVIEW DATE 10/22/2018 BY DJ Total Acres: 0.00 Total Land Value: 250,000 Market: 0 Agricultural: 0 Common: 250,000 PRINTED 08/02/2023 BY SYS