PT OF LOT 4 (EX S-6)
IN OR 2298/468
SUB OF SO PT SEC 12 DB 39/292

GENOVESE JOHN T & JENNIFER V
1292 MANUCY RD
FERNANDINA BEACH, FL 32034

2023

00-00-30-0760-0004-0050

NASSAU COUNTY PROPERTY

BUILDING CHARACTERISTICS

ELEMENT	CD	CONSTRUCTION
Exterior Wall	10	ABOVE AVG 100
Roof Structur	03	GABLE/HIP 100
Roof Cover	03	COMP SHNGL 100
Interior Wall	05	DRYWALL 100
Interior Floo	12	HARDWOOD 60
Interior Floo	14	CARPET 40
Air Condition	03	CENTRAL 100
Heating Type	04	AIR DUCTED 100
Bedrooms		5 100
Bathrooms		4 100
Frame	02	WOOD FRAME 100
Stories	1.5	1.5 100
Units		0 100
Occupancy	00	NONE 100
Quality	04	Quality Level 04
DOR CODE	0100	SINGLE FAMILY
MAP NUM		MKT AREA 03
NEIGHBORHOOD/LOC	3027.00	

AREA TYPE	TOTAL GROSS AREA	PCT OF BASE	TOT ADJ AREA	SUBAREA MARKET VALUE
BAS	1,908	100	1,908	295,305
FGR	512	55	282	43,646
FOP	340	30	102	15,787
FSP	340	40	136	21,049
FST	20	55	11	1,702
FUS	1,007	100	1,007	155,856
STR	145	10	14	2,167
TOTALS	4,272		3,460	535,512

MARKET ADJUSTMENTS

TYPE	MDL	EFF. AREA	TOT ADJ PTS	EFF. BASE RATE	REPL. COST NEW	AYB	EYB	ECON	FNCT		NORM	% COND
0500	01	3,460	109.1580	155.55	538,203	2020	2020	0	0	0	0.50	99.50

1 SFR CUST – 100% - 2021 Heated Area: 2915 HX Base Yr 2021

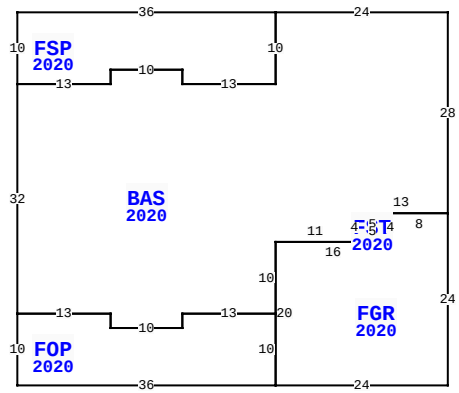

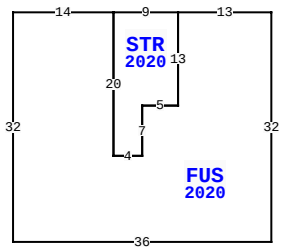

1292 MANUCY RD, FERNANDINA BEACH

BLD DATE		LGL DATE	
XF DATE		LAND DATE	
INC DATE		AG DATE	

VALUATION SUMMARY

VALUATION BY		STANDARD
Tax Group: 8	Tax Dist:	
BUILDING MARKET VALUE		535,512
TOTAL MARKET OB/XF VALUE		10,410
TOTAL LAND VALUE - MARKET		250,000
TOTAL MARKET VALUE		795,922
SOH/AGL Deduction		150,597
ASSESSED VALUE		645,325
TOTAL EXEMPTION VALUE	HX HB	50,000
BASE TAXABLE VALUE		595,325
TOTAL JUST VALUE		795,922
NCON VALUE		0
INCOME VALUE		
PREVIOUS YEAR MKT VALUE		626,529

PERMIT NUM	DESCRIPTION	AMT	ISSUED
20002243	NEW CONSTR	0	05/01/2020

SALES DATA

OFF RECORD Number	DATE	TYPE INST	Q U	V I	RSN CD	SALE PRICE
2298/0468	8/14/2019	QC	U	V	11	100
GRANTOR: VILLA ROBERT J						
GRANTEE: GENOVESE JOHN T & J						
2263/1990	3/20/2019	QC	U	V	11	100
GRANTOR: VILLA ROBERT						
GRANTEE: GENOVESE JOHN T & J						

BUILDING NOTES

BUILDING DIMENSIONS

BAS=[YR=2020] W24 FSP=[YR=2020] W36 S10 E13 N2 E10 S2 E13 N10 $ S10 W13 N2 W10 S2 W13 S32 FOP=[YR=2020] S10 E36 FGR=[YR=2020] E24 N24 W8 FST=[YR=2020] W5 S4 E5 N4 $ S4 W16 S20 $ N10 W13 S2 W10 N2 W13 $ E13 S2 E10 N2 E13 N10 E11 N4 E13 N28 $ PTR= E30 FUS=[YR=2020] E14 STR=[YR=2020] E9 S13 W5 S7 W4 N20 $ S20 E4 N7 E5 N13 E13 S32 W36 N32 $ W30 $.

EXTRA FEATURES

LN	OB/XF CODE	DESCRIPTION	BLD	CAP	L	W	UNITS	UT	Adj R	ADJ UNIT PRICE	ORIG COND	YEAR ON	YEAR ACTUAL	Q	% COND	OB/XF MKT VALUE	NOTES
1	0500	FP-PRE FAB	0	100	0	0	1.00	UT	3,500.00	3,500.00	100	2020	2020	3	99	3,465	
2	0811	CONCRETE B	0	100	0	0	1,349.00	SF	5.20	5.20	100	2020	2020	3	99	6,945	

LAND DESCRIPTION

TOTAL OB/XF 10,410

LN	USE CODE	CLS	LAND USE DESCRIPTION	CAP	RD	LOC ZONE	FRONT	DEPTH	TOT LND UTS	UNIT TYPE	DT	DPTH FACT	% COND	TOT ADJ	UNIT PRICE	ADJ UNIT PRICE	LAND VALUE	OTHER ADJUSTMENTS AND NOTES	YEAR	DENSITY	DECL	FRZ	YR	CONSRV
1	000100	C	SFR	100		RG-1	0.00	0.00	1.00	UT		1.00	1.00	1.00	250,000.00	250,000.00	250,000							

REVIEW DATE 02/24/2021 BY RK Total Acres: 0.00 Total Land Value: 250,000 Market: 0 Agricultural: 0 Common: 250,000 PRINTED 08/02/2023 BY SYS