PT OF LOT 1 IN OR 1800/1287
SUB OF SO PT SEC 12 DBK 39/292

NORDLINGER ROGER G & MICHELLE F
1268 QUATTLEFIELD LN
FERNANDINA BEACH, FL 32034

2023

00-00-30-0760-0001-0040

NASSAU COUNTY PROPERTY

BUILDING CHARACTERISTICS

ELEMENT	CD	CONSTRUCTION
Exterior Wall	12	CEDAR 100
Roof Structur	03	GABLE/HIP 100
Roof Cover	11	SLATE 100
Interior Wall	05	DRYWALL 100
Interior Floo	12	HARDWOOD 70
Interior Floo	14	CARPET 30
Air Condition	03	CENTRAL 100
Heating Type	04	AIR DUCTED 100
Bedrooms		4 100
Bathrooms		3 100
Frame	02	WOOD FRAME 100
Stories	1.	1. 100
Units		0 100
BUD8 Adjustme	05	DIST 1A 100
Occupancy	00	NONE 100
Quality	05	Quality Level 05
DOR CODE	0100	SINGLE FAMILY
MAP NUM		MKT AREA 03
NEIGHBORHOOD/LOC	3027.00	

AREA TYPE	TOTAL GROSS AREA	PCT OF BASE	TOT ADJ AREA	SUBAREA MARKET VALUE
BAS	731	100	731	96,323
BAS	2,061	100	2,061	271,577
BAS	240	100	240	31,624
BAS	63	100	63	8,302
FEP	288	80	230	30,307
FGR	462	55	254	33,470
FOP	9	30	3	395
FOP	24	30	7	922
FST	140	55	77	10,146
TOTALS	4,018		3,666	483,066

MARKET ADJUSTMENTS

TYPE	MDL	EFF. AREA	TOT ADJ PTS	EFF. BASE RATE	REPL. COST NEW	AYB	EYB	ECON	FNCT		NORM	% COND
0900	01	3,666	121.2750	144.01	527,941	1985	2005	0	0	0	8.50	91.50

1 SNGL FAM – 100% - 2015 Heated Area: 3095 HX Base Yr 2015

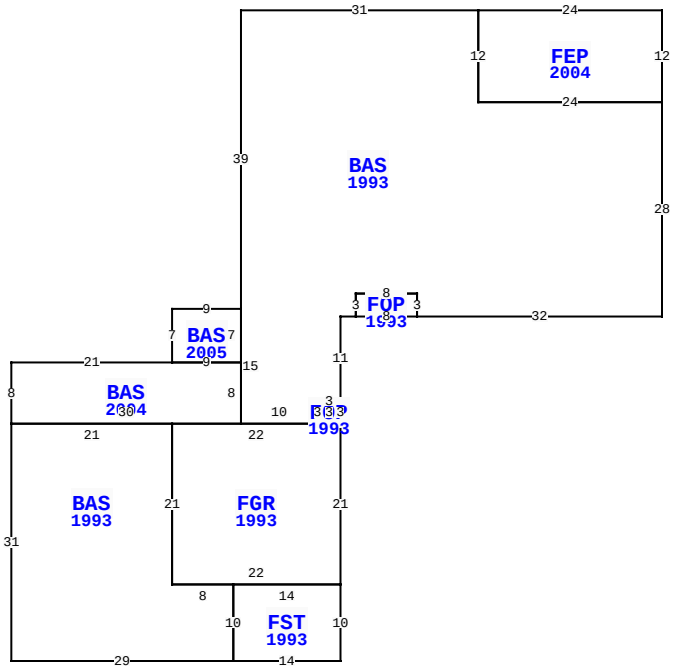

1268 QUATTLEFIELD LN, FERNANDINA BEACH

BLD DATE		LGL DATE	
XF DATE		LAND DATE	
INC DATE		AG DATE	

VALUATION SUMMARY

VALUATION BY		STANDARD
Tax Group: 8	Tax Dist:	
BUILDING MARKET VALUE		483,066
TOTAL MARKET OB/XF VALUE		117,539
TOTAL LAND VALUE - MARKET		1,106,250
TOTAL MARKET VALUE		1,706,855
SOH/AGL Deduction		492,027
ASSESSED VALUE		1,214,828
TOTAL EXEMPTION VALUE	HX HB	50,000
BASE TAXABLE VALUE		1,164,828
TOTAL JUST VALUE		1,706,855
NCON VALUE		0
INCOME VALUE		
PREVIOUS YEAR MKT VALUE		1,322,746

PERMIT NUM	DESCRIPTION	AMT	ISSUED
B1807420	SUMKITCH444	10,611	07/23/2018
E0413960	ELEC OTHER	4,500	12/01/2004
B0413638	ADDITION	20,000	09/01/2004

SALES DATA

OFF RECORD Number	DATE	TYPE INST	Q / U	V / I	RSN CD	SALE PRICE
1800/1287	6/28/2012	WD	Q	I	02	1,365,000
GRANTOR: D'ANNA FRANK						
GRANTEE: NORDLINGER ROGER G						
1163/1644	8/20/2003	WD	Q	I		800,000
GRANTOR: MCGUINNESS NEIL A & K						
GRANTEE: D'ANNA FRANK						

BUILDING NOTES

BUILDING DIMENSIONS

FEP=[YR=2004] W24 BAS=[YR=1993] W31 S39 BAS=[YR=2005] W9 S7 BAS=[YR=2004] W21 S8 BAS=[YR=1993] S31 E29 FST=[YR=1993] E14 N10 FGR=[YR=1993] N21 FOP=[YR=1993] N3 W3 S3 E3$ W22 S21 E22$ W14 S10$ N10 W8 N21 W21$ E30 N8 W9$ E9 N7$ S15 E10 N3 E3 N11 E2 FOP=[YR=1993] E8 N3 W8 S3$ N3 E8 S3 E32 N28 W24 N12$ S12 E24 N12$.

EXTRA FEATURES

LN	OB/XF CODE	DESCRIPTION	BLD	CAP	L	W	UNITS	UT	Adj R	ADJ UNIT PRICE	ORIG COND	YEAR ON	YEAR ACTUAL	Q	% COND	OB/XF MKT VALUE	NOTES
1	0500	FP-PRE FAB	0	100	0	0	1.00	UT	3,500.00	3,500.00	100	1985	1985	3	60	2,100	
2	0754	FOP	0	100	29	15	435.00	SF	45.00	45.00	100	2018	2018	3	86	16,835	
3	0500	FP-PRE FAB	0	100	0	0	1.00	UT	3,500.00	3,500.00	100	2018	2018	3	99	3,465	
4	0600	SUMMER KIT	0	100	0	0	1.00	UT	5,000.00	5,000.00	100	2018	2018	3	86	4,300	
6	0300	BOAT DCK W	0	100	550	4	2,200.00	SF	40.00	40.00	100	2000	2000	3	29	25,520	
8	0300	BOAT DCK W	0	100	0	0	492.00	SF	40.00	40.00	100	2005	2005	3	44	8,659	
9	0462	ST/AL FNC	0	100	0	0	1,104.00	SF	10.00	10.00	100	2005	2005	3	44	4,858	
10	0322	BOAT LFT L	0	100	0	0	2.00	UT	1,500.00	1,500.00	100	2005	2005	3	27	810	
11	1242	WD DECK A	0	100	12	4	48.00	SF	10.00	10.00	100	2005	2005	3	27	130	
12	0855	CONC PAVER	0	100	0	0	1,741.00	SF	10.00	10.00	100	2005	2005	3	87	15,147	

TOTAL OB/XF 81,824

LAND DESCRIPTION

LN	USE CODE	CLS	LAND USE DESCRIPTION	CAP	RD	LOC ZONE	FRONT	DEPTH	TOT LND UTS	UNIT TYPE	DT	DPTH FACT	% COND	TOT ADJ	UNIT PRICE	ADJ UNIT PRICE	LAND VALUE	OTHER ADJUSTMENTS AND NOTES	YEAR	DENSITY	DECL	FRZ	YR	CONSRV
1	000132	C	SFR RIVER	100		RS-1	118.00	564.00	118.00	FF		1.00	1.00	1.25	7,500.00	9,375.00	1,106,250							

REVIEW DATE 12/11/2018 BY DJ Total Acres: 0.00 Total Land Value: 1,106,250 Market: 0 Agricultural: 0 Common: 1,106,250 PRINTED 08/02/2023 BY SYS

PT OF LOT 1 IN OR 1800/1287
SUB OF SO PT SEC 12 DBK 39/292

NORDLINGER ROGER G & MICHELLE F
1268 QUATTLEFIELD LN
FERNANDINA BEACH, FL 32034

2023

00-00-30-0760-0001-0040

NASSAU COUNTY PROPERTY

BUILDING CHARACTERISTICS

ELEMENT	CD	CONSTRUCTION

DOR CODE	0100	SINGLE FAMILY	
MAP NUM		MKT AREA	03
NEIGHBORHOOD/LOC	3027.00		

AREA TYPE	TOTAL GROSS AREA	PCT OF BASE	TOT ADJ AREA	SUBAREA MARKET VALUE
TOTALS				

MARKET ADJUSTMENTS

TYPE	MDL	EFF. AREA	TOT ADJ PTS	EFF. BASE RATE	REPL. COST NEW	AYB	EYB	ECON	FNCT		NORM	% COND

VALUATION SUMMARY

VALUATION BY		STANDARD
Tax Group: 8	Tax Dist:	
BUILDING MARKET VALUE		483,066
TOTAL MARKET OB/XF VALUE		117,539
TOTAL LAND VALUE - MARKET		1,106,250
TOTAL MARKET VALUE		1,706,855
SOH/AGL Deduction		492,027
ASSESSED VALUE		1,214,828
TOTAL EXEMPTION VALUE	HX HB	50,000
BASE TAXABLE VALUE		1,164,828
TOTAL JUST VALUE		1,706,855
NCON VALUE		0
INCOME VALUE		
PREVIOUS YEAR MKT VALUE		1,322,746

PERMIT NUM	DESCRIPTION	AMT	ISSUED

SALES DATA

OFF RECORD Number	DATE	TYPE INST	Q / U	V / I	RSN CD	SALE PRICE
1800/1287	6/28/2012	WD	Q	I	02	1,365,000
GRANTOR: D'ANNA FRANK						
GRANTEE: NORDLINGER ROGER G						
1163/1644	8/20/2003	WD	Q	I		800,000
GRANTOR: MCGUINNESS NEIL A & K						
GRANTEE: D'ANNA FRANK						

BLD DATE		LGL DATE	
XF DATE		LAND DATE	
INC DATE		AG DATE	

BUILDING NOTES

BUILDING DIMENSIONS

EXTRA FEATURES

LN	OB/XF CODE	DESCRIPTION	BLD	CAP	L	W	UNITS	UT	Adj R	ADJ UNIT PRICE	ORIG COND	YEAR ON	YEAR ACTUAL	Q	% COND	OB/XF MKT VALUE	NOTES
13	0861	POOL GUNIT	0	100	0	0	391.00	SF	85.00	85.00	100	2005	2005	3	44	14,623	
14	0835	QUARY TILE	0	100	0	0	1,531.00	SF	10.00	10.00	100	2005	2005	3	87	13,320	
15	1242	WD DECK A	0	100	0	0	566.00	SF	10.00	10.00	100	2005	2005	3	27	1,528	
16	0855	CONC PAVER	0	100	8	5	40.00	SF	10.00	10.00	100	2005	2005	3	87	348	
18	0351	CARPORT MT	0	100	37	16	592.00	SF	7.60	7.60	100	2005	2005	3	27	1,215	
19	0317	DCK PLNG W	0	100	0	0	6.00	UT	1,000.00	1,000.00	100	2005	2005	3	27	1,620	
20	0887	POOL FILTR	0	100	0	0	1.00	UT	650.00	650.00	100	2005	2005	3	44	286	
21	0303	FLT DOCK W	0	100	10	20	200.00	SF	26.00	26.00	100	2006	2006	3	48	2,496	
22	0311	WD GANG WY	0	100	0	0	20.00	SF	45.00	45.00	100	2006	2006	3	31	279	

LAND DESCRIPTION

TOTAL OB/XF 35,715

LN	USE CODE	CLS	LAND USE DESCRIPTION	CAP	RD	LOC ZONE	FRONT	DEPTH	TOT LND UTS	UNIT TYPE	DT	DPTH FACT	% COND	TOT ADJ	UNIT PRICE	ADJ UNIT PRICE	LAND VALUE	OTHER ADJUSTMENTS AND NOTES	YEAR	DENSITY	DECL	FRZ	YR	CONSRV

REVIEW DATE 12/11/2018 BY DJ Total Acres: 0.00 Total Land Value: 1,106,250 Market: 0 Agricultural: 0 Common: 1,106,250 PRINTED 08/02/2023 BY SYS