PT OF LOT 62
IN OR 2453/777
SUB OF SEC 4 PB 0/59

TERRY DAVID & SARA
2632 AMELIA ROAD
FERNANDINA BEACH, FL 32034

2023

00-00-30-0740-0062-0050

NASSAU COUNTY PROPERTY

BUILDING CHARACTERISTICS

ELEMENT	CD	CONSTRUCTION
Exterior Wall	10	ABOVE AVG 100
Roof Structur	03	GABLE/HIP 100
Roof Cover	03	COMP SHNGL 100
Interior Wall	05	DRYWALL 100
Interior Floo	12	HARDWOOD 60
Interior Floo	11	CLAY TILE 40
Air Condition	03	CENTRAL 100
Heating Type	04	AIR DUCTED 100
Bedrooms		4 100
Bathrooms		4 100
Frame	02	WOOD FRAME 100
Stories	1.5	1.5 100
Units		0 100
Occupancy	00	NONE 100
Quality	06	Quality Level 06
DOR CODE	0100	SINGLE FAMILY
MAP NUM		MKT AREA 02
NEIGHBORHOOD/LOC	2021.00	

AREA TYPE	TOTAL GROSS AREA	PCT OF BASE	TOT ADJ AREA	SUBAREA MARKET VALUE
BAS	2,323	100	2,323	330,497
FGR	518	55	285	40,548
FOP	234	30	70	9,959
FSP	452	40	181	25,752
FST	32	55	18	2,561
FUS	480	100	480	68,291
PTO	60	5	3	427
UOP	42	20	8	1,138
TOTALS	4,141		3,368	479,172

MARKET ADJUSTMENTS

TYPE	MDL	EFF. AREA	TOT ADJ PTS	EFF. BASE RATE	REPL. COST NEW	AYB	EYB	ECON	FNCT		NORM	% COND
0900	01	3,368	126.1136	149.76	504,392	2006	2011	0	0	0	5.00	95.00

3 SNGL FAM – 100% - 2022 Heated Area: 2803 HX Base Yr 2022

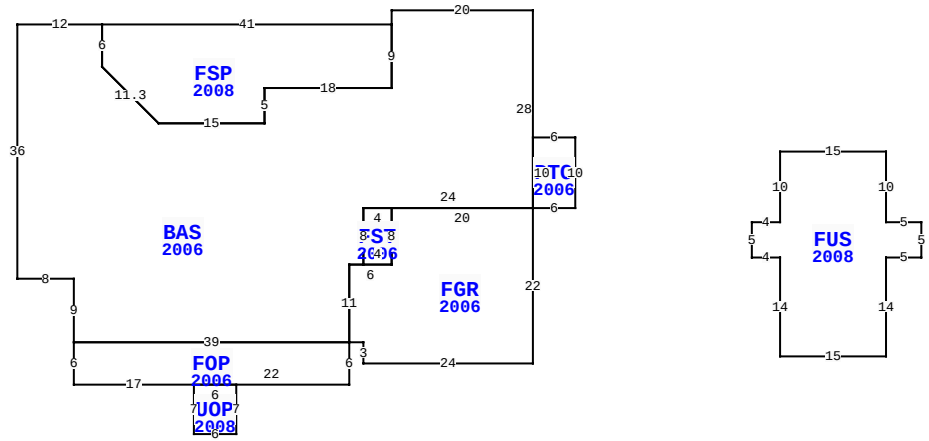

2632 AMELIA RD, FERNANDINA BEACH

BLD DATE	04/19/2007 KW	LGL DATE	
XF DATE		LAND DATE	
INC DATE		AG DATE	

NASSAU COUNTY PROPERTY — VALUATION SUMMARY

VALUATION BY		STANDARD
Tax Group: 8	Tax Dist:	
BUILDING MARKET VALUE		493,476
TOTAL MARKET OB/XF VALUE		6,173
TOTAL LAND VALUE - MARKET		257,500
TOTAL MARKET VALUE		757,149
SOH/AGL Deduction		326,793
ASSESSED VALUE		430,356
TOTAL EXEMPTION VALUE	HX HB	50,000
BASE TAXABLE VALUE		380,356
TOTAL JUST VALUE		757,149
NCON VALUE		0
INCOME VALUE		
PREVIOUS YEAR MKT VALUE		663,907

PERMIT NUM	DESCRIPTION	AMT	ISSUED
B19244	REMODEL	900	12/01/2006
C17420	CO ISSUED	200,000	07/01/2006
M11741	MECH OTHER	0	07/01/2006
B17420	NEW CONSTR	200,000	07/01/2006
E17062	ELEC OTHER	3,500	04/01/2006
P10944	OTHER	0	04/01/2006

SALES DATA

OFF RECORD Number	DATE	TYPE INST	Q / U	V / I	RSN CD	SALE PRICE
2601/1308	3/16/2021	WD	U	I	11	100
GRANTOR: MCKENZIE PATRICK C &						
GRANTEE: DAVID TERRY & SARA						
2453/0777	3/16/2021	WD	Q	I	01	670,000
GRANTOR: MCKENZIE PATRICK C &						
GRANTEE: TERRY DAVID & SARAH						

BUILDING NOTES

BUILDING DIMENSIONS

BAS=[YR=2006] W20 S2 FSP=[YR=2008] W41 S6 R8 D8 E15 N5 E18 N9$ S9 W18 S5 W15 U8 L8 N6 W12 S36 E8 S9 FOP=[YR=2006] S6 E17 UOP=[YR=2008] S7 E6 N7 W6$ E22 N6 W39$ E39 FGR=[YR=2006] E2 S3 E24 N22 W20 FST=[YR=2006] W4 S8 E4 N8$ S8 W6 S11$ N11 E2 N8 E24 PTO=[YR=2006] E6 N10 W6 S10$ N28$ PTR= E35 S20 FUS=[YR=2008] E15 S10 E5 S5 W5 S14 W15 N14 W4 N5 E4 N10$ N20 W35$.

EXTRA FEATURES

LN	OB/XF CODE	DESCRIPTION	BLD	CAP	L	W	UNITS	UT	Adj R	ADJ UNIT PRICE	ORIG COND	YEAR ON	YEAR ACTUAL	Q	% COND	OB/XF MKT VALUE	NOTES
4	0500	FP-PRE FAB	0	100	0	0	1.00	UT	3,500.00	3,500.00	100	2006	2006	3	91	3,185	
5	0855	CONC PAVER	0	100	0	0	314.00	SF	7.00	7.00	100	2010	2010	3	92	2,022	
6	0855	CONC PAVER	0	100	0	0	150.00	SF	7.00	7.00	100	2010	2010	3	92	966	

LAND DESCRIPTION

TOTAL OB/XF 6,173

LN	USE CODE	CLS	LAND USE DESCRIPTION	CAP	RD	LOC ZONE	FRONT	DEPTH	TOT LND UTS	UNIT TYPE	DT	DPTH FACT	% COND	TOT ADJ	UNIT PRICE	ADJ UNIT PRICE	LAND VALUE	OTHER ADJUSTMENTS AND NOTES	YEAR	DENSITY	DECL	FRZ	YR	CONSRV
1	000115	C	SFR ACRES	100		RS-2	0.00	0.00	1.03	AC		1.00	1.00	1.00	250,000.00	250,000.00	257,500							

REVIEW DATE 01/22/2019 BY DJ Total Acres: 1.03 Total Land Value: 257,500 Market: 0 Agricultural: 0 Common: 257,500 PRINTED 08/02/2023 BY SYS

PT OF LOT 62
IN OR 2453/777
SUB OF SEC 4 PB 0/59

TERRY DAVID & SARA
2632 AMELIA ROAD
FERNANDINA BEACH, FL 32034

2023

00-00-30-0740-0062-0050

NASSAU COUNTY PROPERTY

BUILDING CHARACTERISTICS

ELEMENT	CD	CONSTRUCTION
Exterior Wall	10	ABOVE AVG 100
Roof Structur	03	GABLE/HIP 100
Roof Cover	12	MODULAR MT 100
Interior Wall	07	NONE 100
Interior Floo	03	CONC FINSH 100
Air Condition	01	NONE 100
Heating Type	01	NONE 100
Bedrooms		0 100
Bathrooms		0 100
Frame	02	WOOD FRAME 100
Stories	0	0 100
Units		0 100
Occupancy	00	NONE 100
Quality	03	Quality Level 03

DOR CODE	0100	SINGLE FAMILY	
MAP NUM		MKT AREA	02
NEIGHBORHOOD/LOC	2021.00		

AREA TYPE	TOTAL GROSS AREA	PCT OF BASE	TOT ADJ AREA	SUBAREA MARKET VALUE
BAS	880	100	880	14,304
TOTALS	880		880	14,304

MARKET ADJUSTMENTS

TYPE	MDL	EFF. AREA	TOT ADJ PTS	EFF. BASE RATE	REPL. COST NEW	AYB	EYB	ECON	FNCT		NORM	% COND
6500	01	880	54.0000	18.90	16,632	2007	2010	0	0	0	14.00	86.00

4 GARAGE RES – 100% - 2022 Heated Area: 880 HX Base Yr 2022

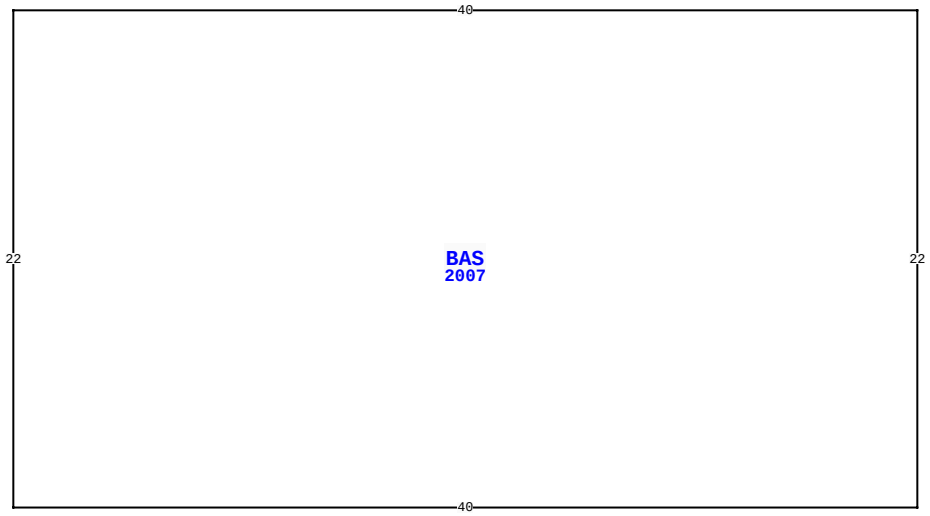

2632 AMELIA RD, FERNANDINA BEACH

BLD DATE	04/19/2007 KW	LGL DATE	
XF DATE		LAND DATE	
INC DATE		AG DATE	

VALUATION SUMMARY

VALUATION BY		STANDARD
Tax Group: 8	Tax Dist:	
BUILDING MARKET VALUE		493,476
TOTAL MARKET OB/XF VALUE		6,173
TOTAL LAND VALUE - MARKET		257,500
TOTAL MARKET VALUE		757,149
SOH/AGL Deduction		326,793
ASSESSED VALUE		430,356
TOTAL EXEMPTION VALUE	HX HB	50,000
BASE TAXABLE VALUE		380,356
TOTAL JUST VALUE		757,149
NCON VALUE		0
INCOME VALUE		
PREVIOUS YEAR MKT VALUE		663,907

PERMIT NUM	DESCRIPTION	AMT	ISSUED
R09079	REPAIR/RRF	7,000	03/01/2006

SALES DATA

OFF RECORD Number	DATE	TYPE INST	Q / U	V / I	RSN CD	SALE PRICE
2601/1308	3/16/2021	WD	U	I	11	100
GRANTOR: MCKENZIE PATRICK C &						
GRANTEE: DAVID TERRY & SARA						
2453/0777	3/16/2021	WD	Q	I	01	670,000
GRANTOR: MCKENZIE PATRICK C &						
GRANTEE: TERRY DAVID & SARAH						

BUILDING NOTES

BUILDING DIMENSIONS

BAS=[YR=2007] W40 S22 E40 N22$.

EXTRA FEATURES

L N	OB/XF CODE	DESCRIPTION	BLD	CAP	L	W	UNITS	UT	Adj R	ADJ UNIT PRICE	ORIG COND	YEAR ON	YEAR ACTUAL	Q	% COND	OB/XF MKT VALUE	NOTES

LAND DESCRIPTION

TOTAL OB/XF 0

L N	USE CODE	CLS	LAND USE DESCRIPTION	CAP	R D	LOC ZONE	FRONT	DEPTH	TOT LND UTS	UNIT TYPE	D T	DPTH FACT	% COND	TOT ADJ	UNIT PRICE	ADJ UNIT PRICE	LAND VALUE	OTHER ADJUSTMENTS AND NOTES	YEAR	DENSITY	DECL	FRZ	YR	CONSRV

REVIEW DATE 01/22/2019 BY DJ Total Acres: 1.03 Total Land Value: 257,500 Market: 0 Agricultural: 0 Common: 257,500 PRINTED 08/02/2023 BY SYS