PT LOT 59 IN OR 731/881 &
OR 1619/731
(EX S-4 S-7 S-8 & S-9 &

THOMPSON BILLY RAY & STEFANIE
2536 AMELIA RD
FERNANDINA BEACH, FL 32034

2023

00-00-30-0740-0059-0060

NASSAU COUNTY PROPERTY

BUILDING CHARACTERISTICS

ELEMENT	CD	CONSTRUCTION
Exterior Wall	05	AVERAGE 100
Roof Structur	03	GABLE/HIP 100
Roof Cover	03	COMP SHNGL 100
Interior Wall	05	DRYWALL 100
Interior Floo	14	CARPET 80
Interior Floo	08	SHT VINYL 20
Air Condition	03	CENTRAL 100
Heating Type	04	AIR DUCTED 100
Bedrooms		3 100
Bathrooms		2 100
Frame	02	WOOD FRAME 100
Stories	1.	1. 100
Units		0 100
Occupancy	00	NONE 100
Quality	03	Quality Level 03
DOR CODE	0100	SINGLE FAMILY
MAP NUM		MKT AREA 02
NEIGHBORHOOD/LOC	2021.00	

AREA TYPE	TOTAL GROSS AREA	PCT OF BASE	TOT ADJ AREA	SUBAREA MARKET VALUE
BAS	1,408	100	1,408	113,435
BAS	420	100	420	33,837
FSP	147	40	59	4,753
PTO	16	5	1	81
PTO	21	5	1	81
TOTALS	2,012		1,889	152,186

MARKET ADJUSTMENTS

TYPE	MDL	EFF. AREA	TOT ADJ PTS	EFF. BASE RATE	REPL. COST NEW	AYB	EYB	ECON	FNCT		NORM	% COND
0100	01	1,889	102.9000	92.87	175,431	1995	1995	0	0	0	13.25	86.75

1 SINGLE FAM – 100% - 1996 Heated Area: 1828 HX Base Yr 1996

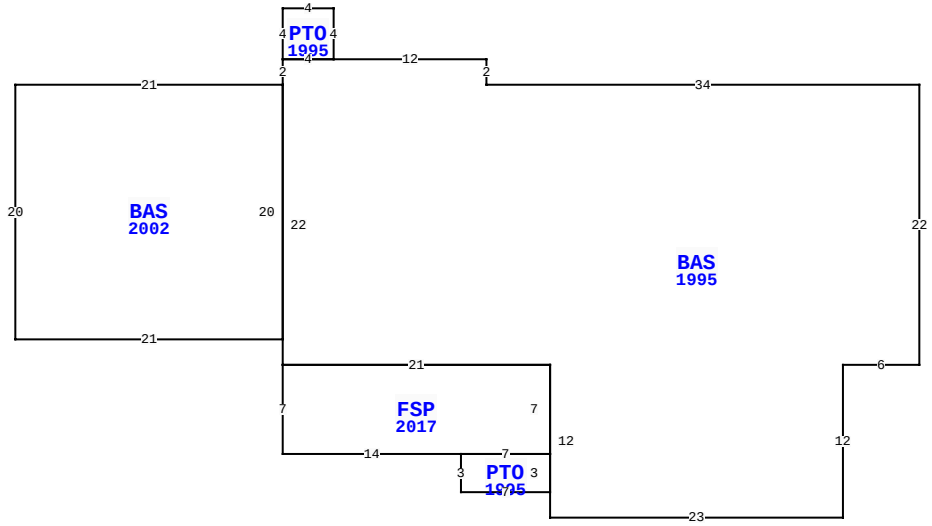

2536 AMELIA RD, FERNANDINA BEACH

BLD DATE		LGL DATE	
XF DATE		LAND DATE	
INC DATE		AG DATE	

VALUATION SUMMARY

VALUATION BY		STANDARD
Tax Group: 8	Tax Dist:	
BUILDING MARKET VALUE		152,186
TOTAL MARKET OB/XF VALUE		9,942
TOTAL LAND VALUE - MARKET		262,500
TOTAL MARKET VALUE		424,628
SOH/AGL Deduction		215,793
ASSESSED VALUE		208,835
TOTAL EXEMPTION VALUE	HX HB	50,000
BASE TAXABLE VALUE		158,835
TOTAL JUST VALUE		424,628
NCON VALUE		0
INCOME VALUE		
PREVIOUS YEAR MKT VALUE		421,504

PERMIT NUM	DESCRIPTION	AMT	ISSUED
B0007735	REMODEL	16,800	11/01/2000
B9502182	NEW CONSTR	60,000	08/01/1995

SALES DATA

OFF RECORD Number	DATE	TYPE INST	Q U	V I	RSN CD	SALE PRICE
1619/0731	5/13/2009	WD	U	I	11	100
GRANTOR: EMMONS CLARENCE L & S						
GRANTEE: THOMPSON BILLY RAY						
0731/0881	6/13/1995	WD	U	V	01	500
GRANTOR: EMMONS CLARENCE L & S						
GRANTEE: THOMPSON BILLY RAY						

BUILDING NOTES

BUILDING DIMENSIONS

BAS=[YR=1995] W34 N2 W12 PTO=[YR=1995] N4 W4 S4 E4 $ W4 S2
BAS=[YR=2002] W21 S20 E21 N20 $ S22 FSP=[YR=2017] S7 E14
PTO=[YR=1995] S3 E7 N3 W7 $ E7 N7 W21 $ E21 S12 E23 N12 E6
N22 $.

EXTRA FEATURES

LN	OB/XF CODE	DESCRIPTION	BLD	CAP	L	W	UNITS	UT	Adj R	ADJ UNIT PRICE	ORIG COND	YEAR ON	YEAR ACTUAL	Q	% COND	OB/XF MKT VALUE	NOTES
1	0810	CONCRETE A	0	100	21	5	105.00	SF	6.50	6.50	100	1995	1995	3	72	491	
2	0811	CONCRETE B	0	100	21	36	756.00	SF	5.20	5.20	100	2003	2003	3	84	3,302	
3	0940	SHEDS/PORT	0	100	12	12	144.00	SF	30.00	30.00	100	2002	2002	3	21	907	
4	0510	GARAGE WD-	0	100	24	12	288.00	SF	35.00	35.00	100	2007	2007	3	52	5,242	

LAND DESCRIPTION

TOTAL OB/XF 9,942

LN	USE CODE	CLS	LAND USE DESCRIPTION	CAP	RD	LOC ZONE	FRONT	DEPTH	TOT LND UTS	UNIT TYPE	DT	DPTH FACT	% COND	TOT ADJ	UNIT PRICE	ADJ UNIT PRICE	LAND VALUE	OTHER ADJUSTMENTS AND NOTES	YEAR	DENSITY	DECL	FRZ	YR	CONSRV
1	000100	C	SFR	100			0.00	0.00	1.00	LT		1.00	1.00	0.75	150,000.00	112,500.00	112,500							
2	000100	C	SFR	100		RS-2	0.00	0.00	1.00	LT		1.00	1.00	1.00	150,000.00	150,000.00	150,000							

REVIEW DATE 02/15/2018 BY DJX Total Acres: 0.00 Total Land Value: 262,500 Market: 0 Agricultural: 0 Common: 262,500 PRINTED 08/02/2023 BY SYS