LOT 11
SEAWALK PB 6/337

REASOR GARY & KIMBERLY
95011 SEAWALK CT
FERNANDINA BEACH, FL 32034

2023

00-00-30-0609-0011-0000

NASSAU COUNTY PROPERTY

BUILDING CHARACTERISTICS

ELEMENT	CD	CONSTRUCTION
Exterior Wall	16	WD FR STUC 100
Roof Structur	08	IRREGULAR 100
Roof Cover	03	COMP SHNGL 100
Interior Wall	05	DRYWALL 100
Interior Floo	12	HARDWOOD 60
Interior Floo	11	CLAY TILE 40
Air Condition	03	CENTRAL 100
Heating Type	04	AIR DUCTED 100
Bedrooms		4 100
Bathrooms		3.5 100
Frame	02	WOOD FRAME 100
Stories	2.	2. 100
Units		0 100
Occupancy	00	NONE 100
Quality	04	Quality Level 04
DOR CODE	0100	SINGLE FAMILY
MAP NUM		MKT AREA 03
NEIGHBORHOOD/LOC	3032.00	

AREA TYPE	TOTAL GROSS AREA	PCT OF BASE	TOT ADJ AREA	SUBAREA MARKET VALUE
BAS	2,082	100	2,082	301,567
FGR	700	55	385	55,765
FOP	80	30	24	3,476
FSP	312	40	125	18,105
FUS	1,346	100	1,346	194,961
PTO	9	5	0	0
PTO	12	5	1	145
PTO	50	5	2	289
PTO	60	5	3	435
PTO	102	5	5	724
TOTALS	4,801		3,983	576,916

MARKET ADJUSTMENTS

TYPE	MDL	EFF. AREA	TOT ADJ PTS	EFF. BASE RATE	REPL. COST NEW	AYB	EYB	ECON	FNCT		NORM	% COND
0500	01	3,983	111.6990	159.17	633,974	2004	2004	0	0	0	9.00	91.00

1 SFR CUST – 100% - 2021 Heated Area: 3428 HX Base Yr 2021

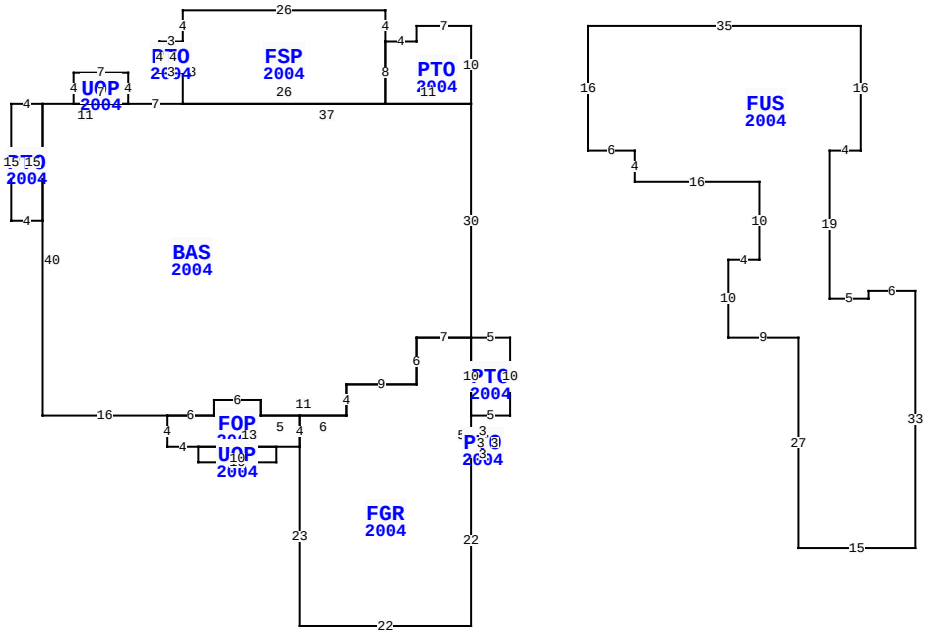

** This building has 12 Sub-Areas

95011 SEAWALK CT, FERNANDINA BEACH

BLD DATE		LGL DATE	
XF DATE		LAND DATE	
INC DATE		AG DATE	

VALUATION SUMMARY

VALUATION BY		STANDARD
Tax Group: 8	Tax Dist:	
BUILDING MARKET VALUE		576,916
TOTAL MARKET OB/XF VALUE		30,773
TOTAL LAND VALUE - MARKET		250,000
TOTAL MARKET VALUE		857,689
SOH/AGL Deduction		200,609
ASSESSED VALUE		657,080
TOTAL EXEMPTION VALUE	HX HB	50,000
BASE TAXABLE VALUE		607,080
TOTAL JUST VALUE		857,689
NCON VALUE		0
INCOME VALUE		
PREVIOUS YEAR MKT VALUE		870,920

PERMIT NUM	DESCRIPTION	AMT	ISSUED
B0412753	NEW CONSTR	243,940	05/01/2004

SALES DATA

OFF RECORD Number	DATE	TYPE INST	Q / U	V / I	RSN CD	SALE PRICE
2354/0840	4/16/2020	WD	Q	I	02	805,000
GRANTOR: ALBRITTON CHARLES C &						
GRANTEE: REASOR GARY & KIMBE						
1932/1406	8/15/2014	WD	Q	I	02	670,000
GRANTOR: GIBSON TOM L JR & SUS						
GRANTEE: ALBRITTON CHARLES C						

BUILDING NOTES

BUILDING DIMENSIONS

PTO=[YR=2004] W7 S2 W4 FSP=[YR=2004] N4 W26 S4
PTO=[YR=2004] W3 S4 E3 N4 $ S8 BAS=[YR=2004] W7
UOP=[YR=2004] N4 W7 S4 E7 $ W11PTO=[YR=2004] W4 S15 E4 N15
$ S40 E16 FOP=[YR=2004] S4 E4 UOP=[YR=2004] S2 E10 N2 W10 $
E13 FGR=[YR=2004] S23 E22 N22 PTO=[YR=2004] E3 N3 W3 S3 $
N5 PTO=[YR=2004] E5 N10 W5 S10 $ N10 W7 S6 W9 S4 W6 S4 $ N4
W5 N2 W6 S2 W6 $ E6 N2 E6 S2 E11 N4 E9 N6 E7 N30 W37 $ E26 N8
$ S8 E11 N10 $ PTR= E15 FUS=[YR=2004] E35 S16 W4 S19 E5 N1
E6 S33 W15 N27 W9 N10 E4 N10 W16 N4 W6 N16 $ W15 $.

EXTRA FEATURES

LN	OB/XF CODE	DESCRIPTION	BLD	CAP	L	W	UNITS	UT	Adj R	ADJ UNIT PRICE	ORIG COND	YEAR ON	YEAR ACTUAL	Q	% COND	OB/XF MKT VALUE	NOTES
1	0504	FP-ELECTRI	0	100	0	0	1.00	UT	2,000.00	2,000.00	100	2004	2004	3	89	1,780	
2	0855	CONC PAVER	0	100	0	0	1,371.00	SF	7.00	7.00	100	2011	2011	3	93	8,925	
3	0855	CONC PAVER	0	100	0	0	136.00	SF	10.00	10.00	100	2004	2004	3	86	1,170	
4	0861	POOL GUNIT	0	100	23	14	322.00	SF	85.00	85.00	100	2004	2004	3	40	10,948	
5	0845	KOOL DECK	0	100	0	0	481.00	SF	7.25	7.25	100	2004	2004	3	86	2,999	
6	1126	CB/STC 8"	0	100	0	0	75.00	SF	8.00	8.00	100	2004	2004	3	86	516	
7	0471	VINYL FNC	0	100	0	0	210.00	LF	32.00	32.00	100	2004	2004	3	66	4,435	

LAND DESCRIPTION

TOTAL OB/XF 30,773

LN	USE CODE	CLS	LAND USE DESCRIPTION	CAP	RD	LOC ZONE	FRONT	DEPTH	TOT LND UTS	UNIT TYPE	DT	DPTH FACT	% COND	TOT ADJ	UNIT PRICE	ADJ UNIT PRICE	LAND VALUE	OTHER ADJUSTMENTS AND NOTES	YEAR	DENSITY	DECL	FRZ	YR	CONSRV
1	000100	C	SFR	100	0003	PUD	0.00	0.00	1.00	LT		1.00	1.00	1.00	250,000.00	250,000.00	250,000							

REVIEW DATE 07/23/2019 BY DJA Total Acres: 0.00 Total Land Value: 250,000 Market: 0 Agricultural: 0 Common: 250,000 PRINTED 08/02/2023 BY SYS