LOT 5
IN OR 1501/1133 & OR 1501/1134
ESMT IN PT OR 441/518

WAITE STEVEN B & ELIZABETH E
8358 SANCTUARY LN
FERNANDINA BEACH, FL 32034

**2023**

**00-00-30-0603-0005-0000**

## BUILDING CHARACTERISTICS

| ELEMENT | CD | CONSTRUCTION |
|---|---|---|
| Exterior Wall | 14 | WD SHINGLE 100 |
| Roof Structur | 08 | IRREGULAR 100 |
| Roof Cover | 09 | CEDAR SHAK 100 |
| Interior Wall | 05 | DRYWALL 100 |
| Interior Floo | 12 | HARDWOOD 70 |
| Interior Floo | 11 | CLAY TILE 30 |
| Air Condition | 03 | CENTRAL 100 |
| Heating Type | 04 | AIR DUCTED 100 |
| Bedrooms | | 5 100 |
| Bathrooms | | 6 100 |
| Frame | 02 | WOOD FRAME 100 |
| Stories | 2. | 2. 100 |
| Units | | 0 100 |
| Quality | 03 | Quality Level 03 |
| DOR CODE | 0100 | SINGLE FAMILY |
| MAP NUM | | MKT AREA 10 |
| NEIGHBORHOOD/LOC | 10005.00 | |

| AREA TYPE | TOTAL GROSS AREA | PCT OF BASE | TOT ADJ AREA | SUBAREA MARKET VALUE |
|---|---|---|---|---|
| BAS | 3,411 | 100 | 3,411 | 1,843,105 |
| FGR | 352 | 55 | 194 | 104,826 |
| FGR | 819 | 55 | 450 | 243,154 |
| FOP | 32 | 30 | 10 | 5,404 |
| FOP | 216 | 30 | 65 | 35,122 |
| FOP | 216 | 30 | 65 | 35,122 |
| FOP | 800 | 30 | 240 | 129,682 |
| FOP | 1,040 | 30 | 312 | 168,586 |
| FST | 49 | 55 | 27 | 14,589 |
| FST | 194 | 55 | 107 | 57,817 |
| TOTALS | 11,788 | | 8,525 | 4,606,412 |

## MARKET ADJUSTMENTS

| TYPE | MDL | EFF. AREA | TOT ADJ PTS | EFF. BASE RATE | REPL. COST NEW | AYB | EYB | ECON | FNCT | MA | NORM | % COND |
|---|---|---|---|---|---|---|---|---|---|---|---|---|
| 0500 | 22 | 8,525 | 401.2578 | 571.79 | 4,874,510 | 2019 | 2019 | 0 | 0 | 4 | 1.50 | 94.50 |

1 SFR CUST - 100% - 2021 Heated Area: 6345 HX Base Yr 2021

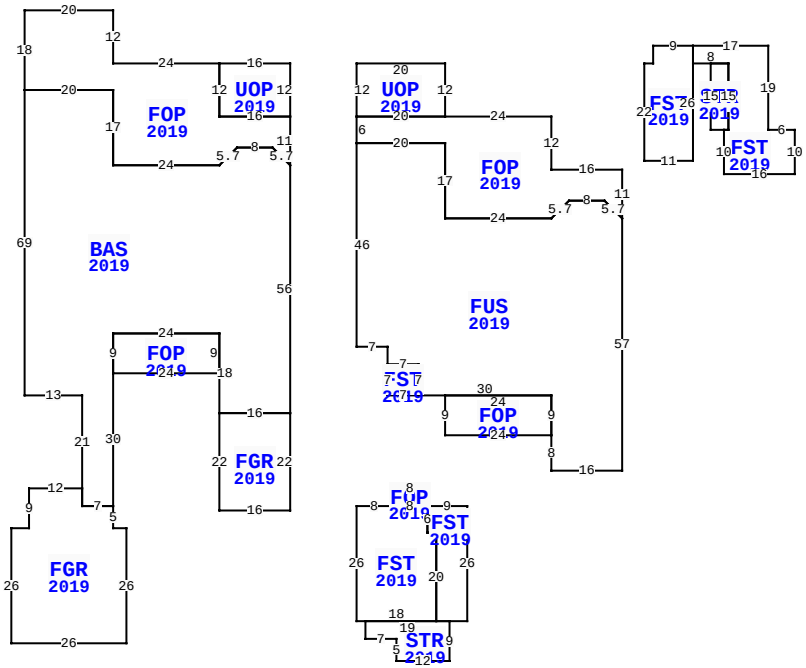


** This building has 18 Sub-Areas

8358 SANCTUARY LN, FERNANDINA BEACH

| | | | |
|---|---|---|---|
| BLD DATE | | LGL DATE | |
| XF DATE | | LAND DATE | |
| INC DATE | | AG DATE | |

## NASSAU COUNTY PROPERTY

PAGE 1 of 1 5

### VALUATION SUMMARY

| | | |
|---|---|---|
| VALUATION BY | | STANDARD |
| Tax Group: 5 | Tax Dist: | |
| BUILDING MARKET VALUE | | 4,606,412 |
| TOTAL MARKET OB/XF VALUE | | 139,426 |
| TOTAL LAND VALUE - MARKET | | 3,200,000 |
| TOTAL MARKET VALUE | | 7,945,838 |
| SOH/AGL Deduction | | 1,790,305 |
| ASSESSED VALUE | | 6,155,533 |
| TOTAL EXEMPTION VALUE | HX HB | 50,000 |
| BASE TAXABLE VALUE | | 6,105,533 |
| TOTAL JUST VALUE | | 7,945,838 |
| NCON VALUE | | 0 |
| INCOME VALUE | | |
| PREVIOUS YEAR MKT VALUE | | 6,519,266 |

| PERMIT NUM | DESCRIPTION | AMT | ISSUED |
|---|---|---|---|
| 19122290 | CO ISSUED | 0 | 11/26/2019 |
| B1810290 | SWIM POOL | 55,334 | 10/11/2018 |
| B1802680 | NEW CONSTR | 918,197 | 03/14/2018 |
| B1801754 | DEMOLITION | 15,000 | 02/20/2018 |
| B1711182 | DEMOLITION | 36,960 | 12/15/2017 |
| 7136 | NEW CONSTR | 251,000 | 04/02/1991 |

## SALES DATA

| OFF RECORD Number | DATE | TYPE INST | Q / U | V / I | RSN CD | SALE PRICE |
|---|---|---|---|---|---|---|
| 1501/1134 | 5/29/2007 | WD | U | I | 06 | 1,650,000 |
| GRANTOR: SCHUCHERT KARALYN | | | | | | |
| GRANTEE: WAITE STEVEN B & EL | | | | | | |
| 1501/1133 | 5/29/2007 | WD | U | I | 06 | 1,650,000 |
| GRANTOR: SCHUCHERT JOSEPH | | | | | | |
| GRANTEE: WAITE STEVEN B & EL | | | | | | |

## BUILDING NOTES

## BUILDING DIMENSIONS

UOP=[YR=2019] W16 FOP=[YR=2019] W24N12W20 S18 BAS=[YR=2019] S69 E13 S21 FGR=[YR=2019] W12 S9W4 S26 E26 N26 W3 N5 W7N4$ S4E7 N30 FOP=[YR=2019] E24 N9 W24S9$ N9E24S18 FGR=[YR=2019] S22E16N22W16$ E16N56 U4 L4 W8 D4 L4 W24N17W20$ E20 S17E24 U4 R4 E8 D4 R4 N11 W16 N12$ S12 E16 N12$ PTR=E15 UOP=[YR=2019] E20S12 FOP=[YR=2019] E24S12 E16S11 FUS=[YR=2019] S57 W16 N8 FOP=[YR=2019] W24N9E24S9$ N9W30 FST=[YR=2019] W7N7E7S7$ N7W7N4 W7 N46 E20 S17E24 U4 R4 E8 D4 R4 $ U4 L4 W8 D4 L4 W24N17W20N6 E20$ W20N12$ W15$ PTR=E80 FST=[YR=2019] E2N4 E9 FST=[YR=2019] E17S19 E6S10W16N10 STR=[YR=2019] W3N15E4S15 W1$ E1N15W8N4$ S26W11N22$ W80$ PTR=E15 S100 FST=[YR=2019] E8 FOP=[YR=2019]

## EXTRA FEATURES

| L N | OB/XF CODE | DESCRIPTION | BLD | CAP | L | W | UNITS | UT | Adj R | ADJ UNIT PRICE | ORIG COND | YEAR ON | YEAR ACTUAL | Q | % COND | OB/XF MKT VALUE | NOTES |
|---|---|---|---|---|---|---|---|---|---|---|---|---|---|---|---|---|---|
| 1 | 0500 | FP-PRE FAB | 0 | 100 | 0 | 0 | 2.00 | UT | 7,000.00 | 7,000.00 | 100 | 2019 | 2019 | 3 | 99 | 13,860 | |
| 2 | 0861 | POOL GUNIT | 0 | 100 | 0 | 0 | 520.00 | SF | 85.00 | 85.00 | 100 | 2019 | 2019 | 3 | 93 | 41,106 | |
| 3 | 0416 | DUNEWALKS | 0 | 100 | 0 | 0 | 1,018.00 | SF | 22.50 | 22.50 | 100 | 2019 | 2019 | 3 | 90 | 20,615 | |
| 4 | 0855 | CONC PAVER | 0 | 100 | 0 | 0 | 2,456.00 | SF | 10.00 | 10.00 | 100 | 2019 | 2019 | 3 | 99 | 24,314 | |
| 5 | 0855 | CONC PAVER | 0 | 100 | 0 | 0 | 195.00 | SF | 25.00 | 25.00 | 100 | 2019 | 2019 | 3 | 99 | 4,826 | |
| 6 | 0830 | FLAGSTONE | 0 | 100 | 0 | 0 | 308.00 | SF | 30.00 | 30.00 | 100 | 2018 | 2018 | 3 | 98 | 9,055 | |
| 7 | 1126 | CB/STC 8" | 0 | 100 | 0 | 0 | 514.00 | SF | 8.00 | 8.00 | 100 | 2019 | 2019 | 3 | 99 | 4,071 | |
| 8 | 0600 | SUMMER KIT | 0 | 100 | 0 | 0 | 1.00 | UT | 10,000.00 | 10,000.00 | 100 | 2020 | 2020 | 3 | 93 | 9,300 | |
| 9 | 1075 | TRELLIS G | 0 | 100 | 5 | 7 | 35.00 | SF | 70.00 | 70.00 | 100 | 2019 | 2019 | 3 | 93 | 2,279 | |
| 10 | 0410 | ELEVATOR | 0 | 100 | 0 | 0 | 1.00 | UT | 10,000.00 | 10,000.00 | 100 | 2019 | 2019 | 3 | 100 | 10,000 | |

TOTAL OB/XF 139,426

## LAND DESCRIPTION

| L N | USE CODE | CLS | LAND USE DESCRIPTION | CAP | R D | LOC ZONE | FRONT | DEPTH | TOT LND UTS | UNIT TYPE | D T | DPTH FACT | % COND | TOT ADJ | UNIT PRICE | ADJ UNIT PRICE | LAND VALUE | OTHER ADJUSTMENTS AND NOTES | YEAR | DENSITY | DECL | FRZ | YR | CONSRV |
|---|---|---|---|---|---|---|---|---|---|---|---|---|---|---|---|---|---|---|---|---|---|---|---|---|
| 1 | 000120 | C | SFR OCN FT | 100 | | RS-1 | 0.00 | 0.00 | 1.00 | LT | | 1.00 | 1.00 | 1.00 | 3,200,000.00 | 3,200,000.00 | 3,200,000 | | | | | | | |

REVIEW DATE 01/02/2020 BY DJ Total Acres: 0.00 Total Land Value: 3,200,000 Market: 0 Agricultural: 0 Common: 3,200,000 PRINTED 08/02/2023 BY SYS