BLK 1 LOTS 6,7 & N 200FT OF
E 65FT OF LOT 8 IN
OR 767/460 & OR 919/807

AMELIA ISLAND HOTEL ASSOCIATES LIMITED PARTNERSHIP
1 SURREY COURT
COLUMBIA, SC 29212

2023

00-00-30-0600-0001-0060

NASSAU COUNTY PROPERTY

BUILDING CHARACTERISTICS

ELEMENT	CD	CONSTRUCTION
Exterior Wall	17	CB STUCCO 100
Roof Structur	12	REINFO/CON 100
Roof Cover	04	BUILT-UP 100
Interior Wall	05	DRYWALL 80
Interior Wall	08	DECORATIVE 20
Interior Floo	14	CARPET 90
Interior Floo	11	CLAY TILE 10
Ceiling	02	F.NOT SUS 100
Air Condition	03	CENTRAL 100
Heating Type	04	AIR DUCTED 100
Fixtures		225 100
Frame	04	REIN CONC 100
Story Height		9 100
RMS		102 100
Units		80 100
BUD8 Adjustme	02	DIST FB 100
Occupancy	00	NONE 100
Quality	04	Quality Level 04
DOR CODE	3900	HOTELS AND MOTELS
MAP NUM		MKT AREA 01
NEIGHBORHOOD/LOC	1060.00	

AREA TYPE	TOTAL GROSS AREA	PCT OF BASE	TOT ADJ AREA	SUBAREA MARKET VALUE
BAS	12,256	100	12,256	1,535,891
BAS	80	100	80	10,025
BAS	90	100	90	11,279
BAS	160	100	160	20,051
BAS	160	100	160	20,051
BAS	1,064	100	1,064	133,338
CAN	1,330	30	399	50,002
FUS	13,320	100	13,320	1,669,229
FUS	13,320	100	13,320	1,669,229
FUS	80	100	80	10,025
TOTALS	42,580		41,649	5,219,348

MARKET ADJUSTMENTS

TYPE	MDL	EFF. AREA	TOT ADJ PTS	EFF. BASE RATE	REPL. COST NEW	AYB	EYB	ECON	FNCT		NORM	% COND
3904	07	41,649	113.2780	167.09	6,959,131	1997	1997	0	0	0	25.00	75.00

1 LMTD HOTEL – 0% - 0 Heated Area: 41250 HX Base Yr

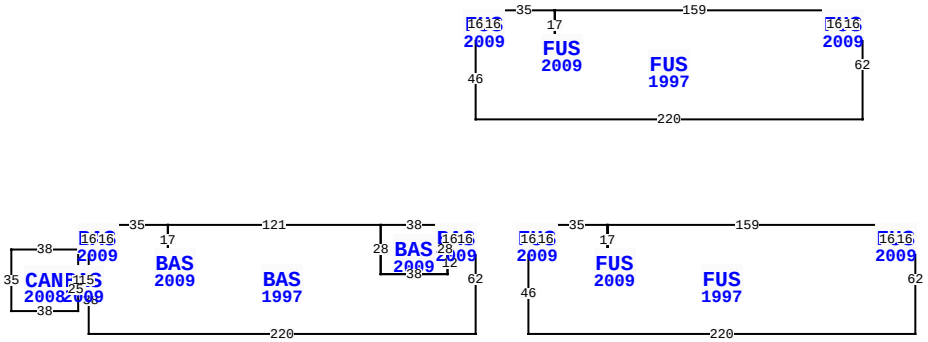

** This building has 15 Sub-Areas

2549 SADLER RD, FERNANDINA BEACH

BLD DATE	11/06/2018	KK	LGL DATE		
XF DATE	11/06/2018	KK	LAND DATE	11/06/2018	KK
INC DATE			AG DATE		

NASSAU COUNTY PROPERTY — VALUATION SUMMARY

VALUATION BY	DIRECT_CAP
Tax Group: 2	Tax Dist:
BUILDING MARKET VALUE	10,047,364
TOTAL MARKET OB/XF VALUE	0
TOTAL LAND VALUE - MARKET	0
TOTAL MARKET VALUE	11,820,428
SOH/AGL Deduction	6,129,561
ASSESSED VALUE	5,690,867
TOTAL EXEMPTION VALUE	0
BASE TAXABLE VALUE	5,690,867
TOTAL JUST VALUE	11,820,428
NCON VALUE	0
INCOME VALUE	11,820,428
PREVIOUS YEAR MKT VALUE	8,452,574

PERMIT NUM	DESCRIPTION	AMT	ISSUED
20180509	REPAIR/RRF	194,400	02/13/2018
20173885	INTERIOR REMODEL	180,000	12/08/2017
20173886	EXTERIOR REMODEL	210,000	12/08/2017
20160571	INSTALL SIGN	3,000	03/02/2016
20130143	H/AC	2,000	01/18/2013
20122282	ELEC OTHER	450	11/07/2012

SALES DATA

OFF RECORD Number	DATE	TYPE INST	Q U	V I	RSN CD	SALE PRICE
0919/0807	2/08/2000	WD	Q	V		65,000
GRANTOR: BENNETT JULIA NEWTON						
GRANTEE: AMELIA ISLAND HOTEL						
0767/0460	8/01/1996	TD	Q	V		304,000
GRANTOR: PERPALL LEON A III TR						
GRANTEE: AMELIA ISLAND HOTEL						

BUILDING NOTES

BUILDING DIMENSIONS

BAS=[YR=1997] W6 BAS=[YR=2009] W10 BAS=[YR=2009] W38 S28 E38 N28 $ S16 E10 N16 $ S16 W10 S12 W38 N28 W121 S17 BAS=[YR=2009] S10 E8 N10 W8 $ N17 W35 BAS=[YR=2009] W10 S16 E10 N16 $ S16 W10 S8 BAS=[YR=2009] W6 CAN=[YR=2008] N10 W38 S35 E38 N25 $ S15 E6 N15 $ S38 E220 N62 $ PTR= E30 FUS=[YR=2009] E10 FUS=[YR=1997] E35 S17 FUS=[YR=2009] S10 E8 N10 W8 $ N17 E159 FUS=[YR=2009] E10 S16 W10 N16 $ S16 E10 N16 E6 S62 W220 N46 E10N16 $ S16 W10N16 $ W30 $ PTR=N60 FUS=[YR=1997] N46 FUS=[YR=2009] N16 E10 S16 W10 $ E10 N16 E35 S17 FUS=[YR=2009] S10 E8 N10 W8 $ N17 E159 FUS=[YR=2009] E10 S16 W10 N16 $ S16 E10 N16 E6 S62 W220 $ S60 $.

EXTRA FEATURES

LN	OB/XF CODE	DESCRIPTION	BLD	CAP	L	W	UNITS	UT	Adj R	ADJ UNIT PRICE	ORIG COND	YEAR ON	YEAR ACTUAL	Q	% COND	OB/XF MKT VALUE	NOTES
1	0966	FIRE SPRNK	0	0	0	0	41,250.00	SF	3.00	3.00	100	1997	1997	3	75	92,813	
2	0410	ELEVATOR	0	0	0	0	1.00	UT	10,000.00	10,000.00	100	1997	1997	3	100	10,000	
3	0812	CONCRETE C	0	0	0	0	3,629.00	SF	4.00	4.00	100	1997	1997	3	75	10,887	
4	0400	CONC CURB	0	0	0	0	1,726.00	LF	15.00	15.00	100	1997	1997	3	81	20,971	
5	0803	ASPHALT C	0	0	0	0	33,803.00	SF	2.00	2.00	100	1997	1997	3	50	33,803	
6	0402	CONC BUMPE	0	0	0	0	27.00	UT	25.00	25.00	100	1997	1997	3	81	547	
7	0972	ST LGHT UN	0	0	0	0	11.00	UT	2,530.00	2,530.00	100	1997	1997	3	45	12,524	
8	0975	ST LT/ARM	0	0	0	0	5.00	UT	500.00	500.00	100	1997	1997	3	45	1,125	
10	0861	POOL GUNIT	0	0	0	0	655.00	SF	85.00	85.00	100	1997	1997	3	21	11,692	
11	0819	CONC 12"	0	0	0	0	1,705.00	SF	9.50	9.50	100	1997	1997	3	75	12,148	

TOTAL OB/XF 206,510

LAND DESCRIPTION

LN	USE CODE	CLS	LAND USE DESCRIPTION	CAP	RD	LOC ZONE	FRONT	DEPTH	TOT LND UTS	UNIT TYPE	DT	DPTH FACT	% COND	TOT ADJ	UNIT PRICE	ADJ UNIT PRICE	LAND VALUE	OTHER ADJUSTMENTS AND NOTES	YEAR	DENSITY	DECL	FRZ	YR	CONSRV
1	003910	C	HOTEL	0	0003	C-1	200.00	400.00	21,000.00	SF		1.00	1.00	1.00	25.00	25.00	525,000							

REVIEW DATE 07/15/2022 BY DC Total Acres: 0.00 Total Land Value: 1,773,064 Market: 0 Agricultural: 0 Common: 0 PRINTED 08/02/2023 BY SYS

BLK 1 LOTS 6,7 & N 200FT OF
E 65FT OF LOT 8 IN
OR 767/460 & OR 919/807

AMELIA ISLAND HOTEL ASSOCIATES LIMITED PARTNERSHIP
1 SURREY COURT
COLUMBIA, SC 29212

2023

00-00-30-0600-0001-0060

BUILDING CHARACTERISTICS

ELEMENT	CD	CONSTRUCTION

DOR CODE	3900	HOTELS AND MOTELS	
MAP NUM		MKT AREA	01
NEIGHBORHOOD/LOC	1060.00		

AREA TYPE	TOTAL GROSS AREA	PCT OF BASE	TOT ADJ AREA	SUBAREA MARKET VALUE
TOTALS				

MARKET ADJUSTMENTS

TYPE	MDL	EFF. AREA	TOT ADJ PTS	EFF. BASE RATE	REPL. COST NEW	AYB	EYB	ECON	FNCT		NORM	% COND

BLD DATE	11/06/2018	KK	LGL DATE		
XF DATE	11/06/2018	KK	LAND DATE	11/06/2018	KK
INC DATE			AG DATE		

NASSAU COUNTY PROPERTY

VALUATION SUMMARY

VALUATION BY	DIRECT_CAP
Tax Group: 2	Tax Dist:
BUILDING MARKET VALUE	10,047,364
TOTAL MARKET OB/XF VALUE	0
TOTAL LAND VALUE - MARKET	0
TOTAL MARKET VALUE	11,820,428
SOH/AGL Deduction	6,129,561
ASSESSED VALUE	5,690,867
TOTAL EXEMPTION VALUE	0
BASE TAXABLE VALUE	5,690,867
TOTAL JUST VALUE	11,820,428
NCON VALUE	0
INCOME VALUE	11,820,428
PREVIOUS YEAR MKT VALUE	8,452,574

PERMIT NUM	DESCRIPTION	AMT	ISSUED
20121969	H/AC	3,000	09/25/2012
20120838	INSTALL METER	980	05/14/2012
20112822	INSTL ELEC SWITCH	1,039	10/10/2011
20111796	REPLACE WATER HEA	27,178	10/07/2011
20090988	H/AC	5,000	07/27/2009
20081091	OTHER	2,645	06/30/2008

SALES DATA

OFF RECORD Number	DATE	TYPE INST	Q U /	V I /	RSN CD	SALE PRICE
0919/0807	2/08/2000	WD	Q	V		65,000
GRANTOR: BENNETT JULIA NEWTON						
GRANTEE: AMELIA ISLAND HOTEL						
0767/0460	8/01/1996	TD	Q	V		304,000
GRANTOR: PERPALL LEON A III TR						
GRANTEE: AMELIA ISLAND HOTEL						

BUILDING NOTES

BUILDING DIMENSIONS

EXTRA FEATURES

LN	OB/XF CODE	DESCRIPTION	BLD	CAP	L	W	UNITS	UT	Adj R	ADJ UNIT PRICE	ORIG COND	YEAR ON	YEAR ACTUAL	Q	% COND	OB/XF MKT VALUE	NOTES
12	0462	ST/AL FNC	0	0	0	0	808.00	SF	10.00	10.00	100	1997	1997	3	26	2,101	
14	0505	FLAGPOLE A	0	0	0	0	20.00	LF	50.00	50.00	100	1997	1997	3	20	200	
15	1126	CB/STC 8"	0	0	30	6	180.00	SF	8.00	8.00	100	1998	1998	3	77	1,109	
16	0978	SECURTY LT	0	0	0	0	8.00	UT	450.00	450.00	100	1998	1998	3	48	1,728	
17	0978	SECURTY LT	0	0	0	0	4.00	UT	450.00	450.00	100	2002	2002	3	61	1,098	
18	0097	AWNING CN	0	0	0	0	36.00	SF	65.00	65.00	100	2002	2002	3	40	936	
19	1242	WD DECK A	0	0	0	0	231.00	SF	10.00	10.00	100	2004	2004	3	24	554	
20	4950	BOLLARD	0	0	2	0	2.00	UT	100.00	100.00	100	2004	2004	3	100	200	
21	0463	FENCE GATE	0	0	0	0	2.00	UT	300.00	300.00	100	2004	2004	3	66	396	
22	0648	LIGHTS-AV	0	0	0	0	13.00	UT	140.00	140.00	100	2004	2004	3	24	437	

TOTAL OB/XF 8,759

LAND DESCRIPTION

LN	USE CODE	CLS	LAND USE DESCRIPTION	CAP	RD	LOC ZONE	FRONT	DEPTH	TOT LND UTS	UNIT TYPE	DT	DPTH FACT	% COND	TOT ADJ	UNIT PRICE	ADJ UNIT PRICE	LAND VALUE	OTHER ADJUSTMENTS AND NOTES	YEAR	DENSITY	DECL	FRZ	YR	CONSRV

REVIEW DATE 07/15/2022 BY DC Total Acres: 0.00 Total Land Value: 1,773,064 Market: 0 Agricultural: 0 Common: 0 PRINTED 08/02/2023 BY SYS

BLK 1 LOTS 6,7 & N 200FT OF
E 65FT OF LOT 8 IN
OR 767/460 & OR 919/807

AMELIA ISLAND HOTEL ASSOCIATES LIMITED PARTNERSHIP
1 SURREY COURT
COLUMBIA, SC 29212

2023

00-00-30-0600-0001-0060

NASSAU COUNTY PROPERTY

BUILDING CHARACTERISTICS

ELEMENT	CD	CONSTRUCTION

DOR CODE	3900	HOTELS AND MOTELS	
MAP NUM		MKT AREA	01
NEIGHBORHOOD/LOC	1060.00		

AREA TYPE	TOTAL GROSS AREA	PCT OF BASE	TOT ADJ AREA	SUBAREA MARKET VALUE
TOTALS				

MARKET ADJUSTMENTS

TYPE	MDL	EFF. AREA	TOT ADJ PTS	EFF. BASE RATE	REPL. COST NEW	AYB	EYB	ECON	FNCT		NORM	% COND

VALUATION SUMMARY

VALUATION BY	DIRECT_CAP
Tax Group: 2	Tax Dist:
BUILDING MARKET VALUE	10,047,364
TOTAL MARKET OB/XF VALUE	0
TOTAL LAND VALUE - MARKET	0
TOTAL MARKET VALUE	11,820,428
SOH/AGL Deduction	6,129,561
ASSESSED VALUE	5,690,867
TOTAL EXEMPTION VALUE	0
BASE TAXABLE VALUE	5,690,867
TOTAL JUST VALUE	11,820,428
NCON VALUE	0
INCOME VALUE	11,820,428
PREVIOUS YEAR MKT VALUE	8,452,574

PERMIT NUM	DESCRIPTION	AMT	ISSUED
20072024	OTHER	16,290	10/29/2007
10591B	SWIM POOL	27,500	07/09/1997
10210B	NEW CONSTR	1,161,000	12/20/1996
B9610079	DEMOLITION	750	10/09/1996
B9610080	DEMOLITION	750	10/09/1996

SALES DATA

OFF RECORD Number	DATE	TYPE INST	Q U /	V I /	RSN CD	SALE PRICE
0919/0807	2/08/2000	WD	Q	V		65,000
GRANTOR: BENNETT JULIA NEWTON						
GRANTEE: AMELIA ISLAND HOTEL						
0767/0460	8/01/1996	TD	Q	V		304,000
GRANTOR: PERPALL LEON A III TR						
GRANTEE: AMELIA ISLAND HOTEL						

BLD DATE	11/06/2018	KK	LGL DATE	
XF DATE	11/06/2018	KK	LAND DATE	11/06/2018 KK
INC DATE			AG DATE	

EXTRA FEATURES

LN	OB/XF CODE	DESCRIPTION	BLD	CAP	L	W	UNITS	UT	Adj R	ADJ UNIT PRICE	ORIG COND	YEAR ON	YEAR ACTUAL	Q	% COND	OB/XF MKT VALUE	NOTES
23	0090	AUTO DOOR	0	0	0	0	2.00	UT	2,500.00	2,500.00	100	1997	1997	3	20	1,000	

BUILDING NOTES

BUILDING DIMENSIONS

LAND DESCRIPTION

TOTAL OB/XF 1,000

LN	USE CODE	CLS	LAND USE DESCRIPTION	CAP	RD	LOC ZONE	FRONT	DEPTH	TOT LND UTS	UNIT TYPE	DT	DPTH FACT	% COND	TOT ADJ	UNIT PRICE	ADJ UNIT PRICE	LAND VALUE	OTHER ADJUSTMENTS AND NOTES	YEAR	DENSITY	DECL	FRZ	YR	CONSRV

REVIEW DATE 07/15/2022 BY DC Total Acres: 0.00 Total Land Value: 1,773,064 Market: 0 Agricultural: 0 Common: 0 PRINTED 08/02/2023 BY SYS