LOT 28
RIVER OAKS OF AMELIA 2 PB6/111

BENNING THEODORE R III
3058 RIVERSIDE DRIVE
FERNANDINA BEACH, FL 32034

2023

00-00-30-0560-0028-0000

NASSAU COUNTY PROPERTY

BUILDING CHARACTERISTICS

ELEMENT	CD	CONSTRUCTION
Exterior Wall	10	ABOVE AVG 100
Roof Structur	03	GABLE/HIP 100
Roof Cover	03	COMP SHNGL 100
Interior Wall	05	DRYWALL 100
Interior Floo	09	PINE WOOD 80
Interior Floo	14	CARPET 20
Air Condition	03	CENTRAL 100
Heating Type	04	AIR DUCTED 100
Bedrooms		5 100
Bathrooms		3.5 100
Frame	02	WOOD FRAME 100
Stories	3.	3. 100
Units		0 100
Quality	01	Quality Level 01
DOR CODE	0100	SINGLE FAMILY
MAP NUM		MKT AREA 02
NEIGHBORHOOD/LOC	2024.00	

AREA TYPE	TOTAL GROSS AREA	PCT OF BASE	TOT ADJ AREA	SUBAREA MARKET VALUE
BAS	1,496	100	1,496	184,846
FGR	770	55	424	52,390
FOP	90	30	27	3,336
FOP	352	30	106	13,098
FOP	352	30	106	13,098
FOP	352	30	106	13,098
FUS	429	100	429	53,008
FUS	682	100	682	84,268
FUS	1,770	100	1,770	218,701
UOP	44	20	9	1,112
TOTALS	6,693		5,226	645,723

MARKET ADJUSTMENTS

TYPE	MDL	EFF. AREA	TOT ADJ PTS	EFF. BASE RATE	REPL. COST NEW	AYB	EYB	ECON	FNCT		NORM	% COND
0900	11	5,226	114.3420	135.78	709,586	2003	2003	0	0	0	9.00	91.00

1 SNGL FAM – 0% - 0 Heated Area: 4377 HX Base Yr

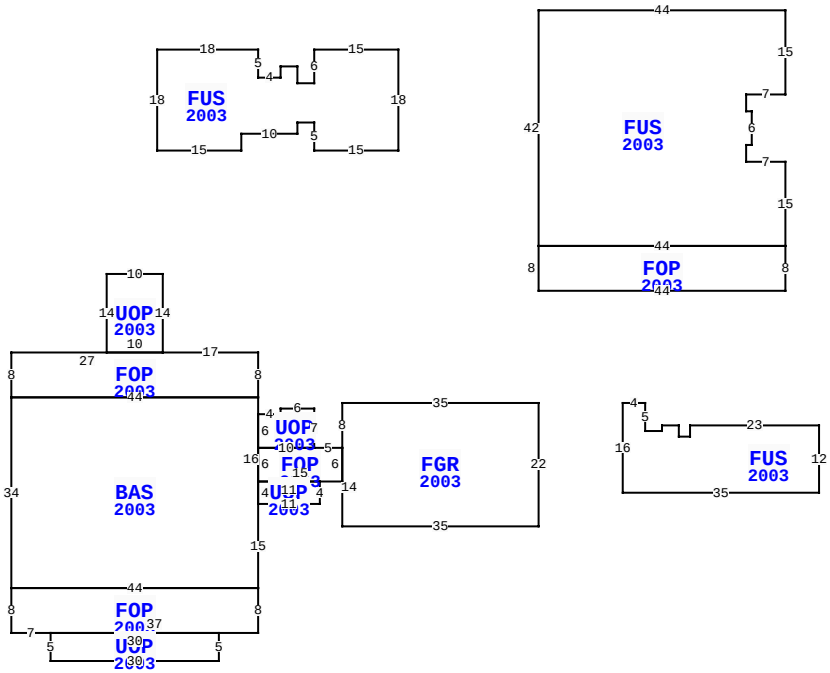

** This building has 13 Sub-Areas

3058 RIVERSIDE DR, FERNANDINA BEACH

BLD DATE		LGL DATE	
XF DATE		LAND DATE	
INC DATE		AG DATE	

VALUATION SUMMARY

VALUATION BY	STANDARD
Tax Group: 8	Tax Dist:
BUILDING MARKET VALUE	645,723
TOTAL MARKET OB/XF VALUE	31,652
TOTAL LAND VALUE - MARKET	200,000
TOTAL MARKET VALUE	877,375
SOH/AGL Deduction	0
ASSESSED VALUE	877,375
TOTAL EXEMPTION VALUE	0
BASE TAXABLE VALUE	877,375
TOTAL JUST VALUE	877,375
NCON VALUE	0
INCOME VALUE	
PREVIOUS YEAR MKT VALUE	924,670

PERMIT NUM	DESCRIPTION	AMT	ISSUED
22013479	ADDITION	111,191	09/02/2022
B0209536	NEW CONSTR	323,994	04/01/2002

SALES DATA

OFF RECORD Number	DATE	TYPE INST	Q / U	V / I	RSN CD	SALE PRICE
2474/1744	6/24/2021	WD	Q	I	01	975,000
GRANTOR: ROWE JONATHAN M & SUS						
GRANTEE: BENNING THEODORE R						
0878/1172	4/13/1999	WD	U	V	01	35,000
GRANTOR: ROWAN RIC & SHARON M						
GRANTEE: ROWE JONATHAN M & S						

BUILDING NOTES

BUILDING DIMENSIONS

FGR=[YR=2003] W35 S8 FOP=[YR=2003] W5 UOP=[YR=2003] N7 W6 S1 W4 BAS=[YR=2003] N3 FOP=[YR=2003] N8 W17 UOP=[YR=2003] N14 W10 S14 E10$ W27 S8 E44$ W44 S34 FOP=[YR=2003] S8 E7 UOP=[YR=2003] S5 E30 N5 W30$ E37 N8 W44$ E44 N15 UOP=[YR=2003] E11 N4 W11 S4$ N16$ S6 E10$ W10 S6 E15 N6$ S14 E35 N22$ PTR=N20 FOP=[YR=2003] N8 FUS=[YR=2003] N42 E44 S15 W7 S3 E1 S6 W1 S3 E7 S15 W44$ E44 S8 W44$ S20$ PTR=E15 FUS=[YR=2003] E4 S5 E3 N1 E3 S2 E2 N2 E23 S12 W35 N16$ W15$ PTR=N45 W25 FUS=[YR=2003] W15 N5 W3 S2 W10 S3 W15 N18 E18 S5 E4 N2 E3 S3 E3 N6 E15 S18$ E25 S45$.

EXTRA FEATURES

LN	OB/XF CODE	DESCRIPTION	BLD	CAP	L	W	UNITS	UT	Adj R	ADJ UNIT PRICE	ORIG COND	YEAR ON	YEAR ACTUAL	Q	% COND	OB/XF MKT VALUE	NOTES
1	0500	FP-PRE FAB	0	0	0	0	1.00	UT	3,500.00	3,500.00	100	2003	2003	3	88	3,080	
2	0810	CONCRETE A	0	0	0	0	444.00	SF	6.50	6.50	100	2003	2003	3	84	2,424	
3	0861	POOL GUNIT	0	0	0	0	474.00	SF	85.00	85.00	100	2003	2003	3	36	14,504	
4	0845	KOOL DECK	0	0	0	0	304.00	SF	7.25	7.25	100	2003	2003	3	84	1,851	
5	0810	CONCRETE A	0	0	0	0	530.00	SF	6.50	6.50	100	2003	2003	3	84	2,894	
6	0855	CONC PAVER	0	0	0	0	72.00	SF	10.00	10.00	100	2003	2003	3	84	605	
7	0830	FLAGSTONE	0	0	0	0	348.00	SF	12.00	12.00	100	2003	2003	3	84	3,508	
8	0462	ST/AL FNC	0	0	0	0	774.00	SF	10.00	10.00	100	2003	2003	3	36	2,786	

LAND DESCRIPTION

TOTAL OB/XF 31,652

LN	USE CODE	CLS	LAND USE DESCRIPTION	CAP	RD	LOC ZONE	FRONT	DEPTH	TOT LND UTS	UNIT TYPE	DT	DPTH FACT	% COND	TOT ADJ	UNIT PRICE	ADJ UNIT PRICE	LAND VALUE	OTHER ADJUSTMENTS AND NOTES	YEAR	DENSITY	DECL	FRZ	YR	CONSRV
1	000100	C	SFR	0			0.00	0.00	1.00	LT		1.00	1.00	1.00	200,000.00	200,000.00	200,000							

REVIEW DATE 06/26/2023 BY TW Total Acres: 0.00 Total Land Value: 200,000 Market: 0 Agricultural: 0 Common: 200,000 PRINTED 08/02/2023 BY SYS