LOT 17 IN OR 777/1255
RIVER OAKS OF AMELIA PB 5/407

WRIGHT JAN MICHAEL & MONICA H
195 RIVER OAKS DR
FERNANDINA BEACH, FL 32034

2023

00-00-30-0560-0017-0000

BUILDING CHARACTERISTICS

ELEMENT	CD	CONSTRUCTION
Exterior Wall	05	AVERAGE 100
Roof Structur	03	GABLE/HIP 100
Roof Cover	03	COMP SHNGL 100
Interior Wall	05	DRYWALL 100
Interior Floo	11	CLAY TILE 50
Interior Floo	13	LVT/LAMNT 50
Air Condition	03	CENTRAL 100
Heating Type	04	AIR DUCTED 100
Bedrooms		3 100
Bathrooms		2.5 100
Frame	02	WOOD FRAME 100
Stories	2.	2. 100
Units		0 100
Occupancy	00	NONE 100
Quality	03	Quality Level 03
DOR CODE	0100	SINGLE FAMILY
MAP NUM		MKT AREA 02
NEIGHBORHOOD/LOC	2024.00	

AREA TYPE	TOTAL GROSS AREA	PCT OF BASE	TOT ADJ AREA	SUBAREA MARKET VALUE
BAS	1,346	100	1,346	171,671
FGR	462	55	254	32,396
FOP	26	30	8	1,020
FSP	650	40	260	33,161
FUS	1,430	100	1,430	182,385
PTO	26	5	1	127
PTO	480	5	24	3,061
STR	12	10	1	127
TOTALS	4,432		3,324	423,949

MARKET ADJUSTMENTS

TYPE	MDL	EFF. AREA	TOT ADJ PTS	EFF. BASE RATE	REPL. COST NEW	AYB	EYB	ECON	FNCT		NORM	% COND
0500	01	3,324	102.5800	146.18	485,902	1996	1996	0	0	0	12.75	87.25

1 SFR CUST - 100% - 1997 Heated Area: 2776 HX Base Yr 1997

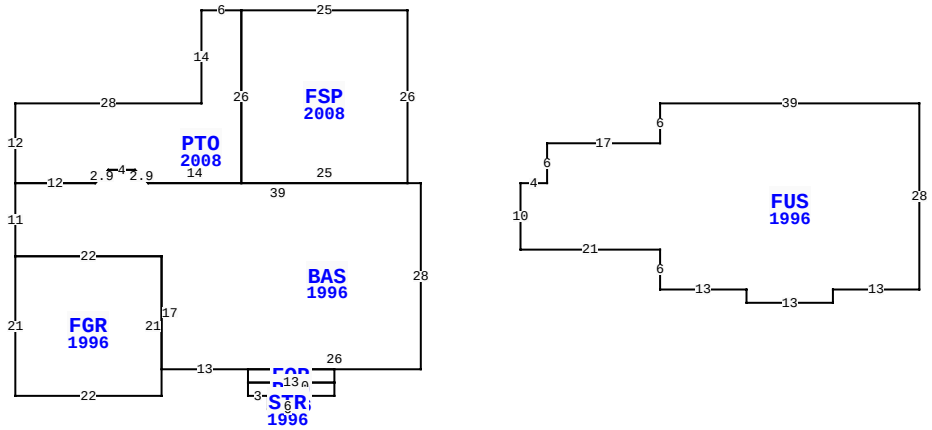

195 RIVER OAKS DR, FERNANDINA BEACH

BLD DATE		LGL DATE	
XF DATE		LAND DATE	
INC DATE		AG DATE	

NASSAU COUNTY PROPERTY

PAGE 1 of 1 8

VALUATION SUMMARY

VALUATION BY		STANDARD
Tax Group: 8	Tax Dist:	
BUILDING MARKET VALUE		423,949
TOTAL MARKET OB/XF VALUE		6,941
TOTAL LAND VALUE - MARKET		200,000
TOTAL MARKET VALUE		630,890
SOH/AGL Deduction		360,794
ASSESSED VALUE		270,096
TOTAL EXEMPTION VALUE	HX HB	50,000
BASE TAXABLE VALUE		220,096
TOTAL JUST VALUE		630,890
NCON VALUE		0
INCOME VALUE		
PREVIOUS YEAR MKT VALUE		509,702

PERMIT NUM	DESCRIPTION	AMT	ISSUED
B21450	SCRN ENCLOSURE	7,000	05/01/2008
R11280	REPAIR/RRF	500	05/01/2008
B9602715	NEW CONSTR	106,002	03/01/1996

SALES DATA

OFF RECORD Number	DATE	TYPE INST	Q U	V I	RSN CD	SALE PRICE
0777/1255	11/22/1996	WD	Q	I		200,000

GRANTOR: AMELIA ISLAND BUILDIN

GRANTEE: WRIGHT JAN MICHAEL

BUILDING NOTES

BUILDING DIMENSIONS

BAS=[YR=1996] W2 FSP=[YR=2008] N26 W25 PTO=[YR=2008] W6 S14 W28 S12 E12 R2 U2 E4 D2 R2 E14 N26$ S26 E25$ W39 L2 U2 W4 D2 L2 W12 S11 FGR=[YR=1996] S21 E22 N21 W22$ E22 S17 E13 FOP=[YR=1996] S2 PTO=[YR=1996] S2 E3 STR=[YR=1996] S2 E6 N2 W6$ E10 N2 W13$ E13 N2 W13$ E26 N28$ PTR=E15 FUS=[YR=1996] E4 N6 E17N6 E39 S28 W13 S2 W13 N2 W13 N6 W21 N10$ W15$.

EXTRA FEATURES

LN	OB/XF CODE	DESCRIPTION	BLD	CAP	L	W	UNITS	UT	Adj R	ADJ UNIT PRICE	ORIG COND	YEAR ON	YEAR ACTUAL	Q	% COND	OB/XF MKT VALUE	NOTES
1	0504	FP-ELECTRI	0	100	0	0	1.00	UT	2,000.00	2,000.00	100	1996	1996	3	80	1,600	
2	0812	CONCRETE C	0	100	0	0	1,344.00	SF	4.00	4.00	100	1996	1996	3	73	3,924	
3	0810	CONCRETE A	0	100	0	0	244.00	SF	6.50	6.50	100	1996	1996	3	73	1,158	
4	0475	VF 4 SBPL	0	100	0	0	18.00	LF	14.00	14.00	100	2007	2007	3	74	186	
5	0469	VF LATTIC	0	100	0	0	18.00	SF	5.50	5.50	100	2007	2007	3	74	73	

LAND DESCRIPTION

TOTAL OB/XF 6,941

LN	USE CODE	CLS	LAND USE DESCRIPTION	CAP	RD	LOC ZONE	FRONT	DEPTH	TOT LND UTS	UNIT TYPE	DT	DPTH FACT	% COND	TOT ADJ	UNIT PRICE	ADJ UNIT PRICE	LAND VALUE	OTHER ADJUSTMENTS AND NOTES	YEAR	DENSITY	DECL	FRZ	YR	CONSRV
1	000100	C	SFR	100		RG-1	0.00	0.00	1.00	LT		1.00	1.00	1.00	200,000.00	200,000.00	200,000							

REVIEW DATE 05/14/2019 BY DJA Total Acres: 0.00 Total Land Value: 200,000 Market: 0 Agricultural: 0 Common: 200,000 PRINTED 08/02/2023 BY SYS