PT LOTS 29 & 30
IN OR 907/89
THE RESIDENCE PB 5/149-152

ADAMS J DENNIS & LILLIAN J/
8219 RESIDENCE COURT
FERNANDINA BEACH, FL 32034

2023

00-00-30-0546-0029-0000

BUILDING CHARACTERISTICS

ELEMENT	CD	CONSTRUCTION
Exterior Wall	17	CB STUCCO 70
Exterior Wall	10	ABOVE AVG 30
Roof Structur	08	IRREGULAR 100
Roof Cover	07	CONC TILE 100
Interior Wall	05	DRYWALL 100
Interior Floo	14	CARPET 70
Interior Floo	11	CLAY TILE 30
Air Condition	03	CENTRAL 100
Heating Type	04	AIR DUCTED 100
Bedrooms		3 100
Bathrooms		2.5 100
Frame	02	WOOD FRAME 100
Stories	2.	2. 100
Units		0 100
Occupancy	00	NONE 100
Quality	04	Quality Level 04
DOR CODE	0100	SINGLE FAMILY
MAP NUM		MKT AREA 10
NEIGHBORHOOD/LOC	10003.00	

AREA TYPE	TOTAL GROSS AREA	PCT OF BASE	TOT ADJ AREA	SUBAREA MARKET VALUE
BAS	1,951	100	1,951	276,661
FGR	488	55	268	38,003
FOP	26	30	8	1,135
FOP	133	30	40	5,672
FOP	142	30	43	6,097
FOP	197	30	59	8,367
FUS	855	100	855	121,243
UOP	90	20	18	2,552
UOP	190	20	38	5,388
TOTALS	4,072		3,280	465,119

MARKET ADJUSTMENTS

TYPE	MDL	EFF. AREA	TOT ADJ PTS	EFF. BASE RATE	REPL. COST NEW	AYB	EYB	ECON	FNCT		NORM	% COND
0500	01	3,280	112.2492	159.96	524,669	1999	1999	0	0	0	11.35	88.65

1 SFR CUST – 100% - 2000 Heated Area: 2806 HX Base Yr 2000

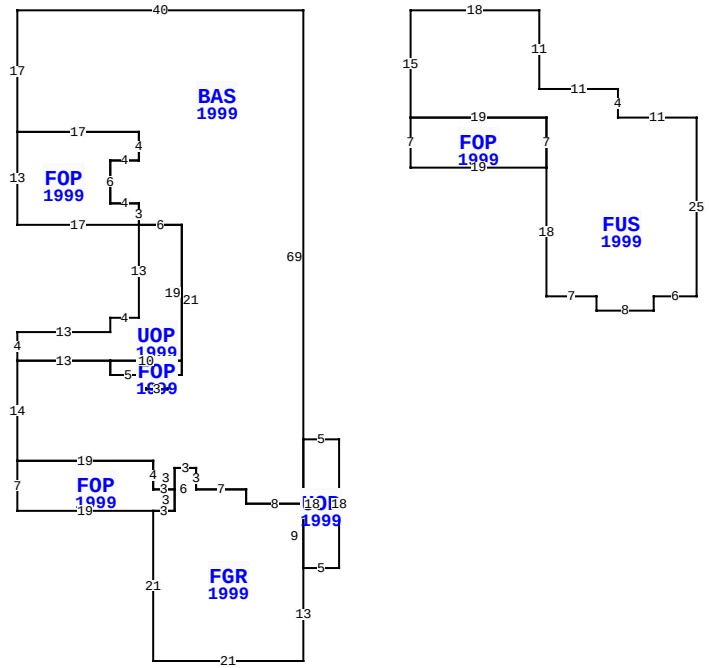

8219 RESIDENCE CT, FERNANDINA BEACH

BLD DATE		LGL DATE	
XF DATE		LAND DATE	
INC DATE		AG DATE	

NASSAU COUNTY PROPERTY

PAGE 1 of 1 5

VALUATION SUMMARY

VALUATION BY		STANDARD
Tax Group: 5	Tax Dist:	
BUILDING MARKET VALUE		465,119
TOTAL MARKET OB/XF VALUE		10,300
TOTAL LAND VALUE - MARKET		375,000
TOTAL MARKET VALUE		850,419
SOH/AGL Deduction		288,748
ASSESSED VALUE		561,671
TOTAL EXEMPTION VALUE	HX HB	50,000
BASE TAXABLE VALUE		511,671
TOTAL JUST VALUE		850,419
NCON VALUE		0
INCOME VALUE		
PREVIOUS YEAR MKT VALUE		725,411

PERMIT NUM	DESCRIPTION	AMT	ISSUED
B9805508	NEW CONSTR	135,200	10/01/1998

SALES DATA

OFF RECORD Number	DATE	TYPE INST	Q / U	V / I	RSN CD	SALE PRICE
0907/0089	11/05/1999	WD	Q	I		475,900
GRANTOR: SUMMBER BEACH DEVELOP						
GRANTEE: ADAMS J DENNIS & LI						
0860/1252	12/30/1998	WD	U	V	09	280,000
GRANTOR: CITADEL LIFE & HEALTH						
GRANTEE: SUMMER BEACH DEVELO						

BUILDING NOTES

BUILDING DIMENSIONS

BAS=[YR=1999] W40 S17 FOP=[YR=1999] S13 E17 N3 W4 N6 E4 N4 W17 $ E17 S4 W4 S6 E4 S3 UOP=[YR=1999] S13 W4 S2 W13 S4 E13 FOP=[YR=1999] S2 E5 S2 E3 N2 E2 N2 W10 $ E10 N19 W6 $ E6 S 21 W2 S2 W3 N2 W5 N2 W13 S14 FOP=[YR=1999] S7 E19 FGR=[YR=1999] S21 E21 N13 UOP=[YR=1999] E5 N18 W5 S18 $ N9 W8 N2 W7 N3 W3 S6 W3 $ E3 N3 W3 N4 W19 $ E19 S4 E3 N3 E3 S3 E7 S2 E8 N69 $ PTR= E15 FUS=[YR=1999] E18 S11 E11 S4 E11 S25 W6 S2 W8 N2 W7 N18 FOP=[YR=1999] N7 W19 S7 E19 $ N7 W19 N15 $ W15 $.

EXTRA FEATURES

LN	OB/XF CODE	DESCRIPTION	BLD	CAP	L	W	UNITS	UT	Adj R	ADJ UNIT PRICE	ORIG COND	YEAR ON	YEAR ACTUAL	Q	% COND	OB/XF MKT VALUE	NOTES
1	0810	CONCRETE A	0	100	0	0	1,106.00	SF	6.50	6.50	100	1999	1999	3	79	5,679	
2	0858	SCULP CONC	0	100	0	0	149.00	SF	13.00	13.00	100	1999	1999	3	94	1,821	
3	1126	CB/STC 8"	0	100	0	0	393.00	SF	8.00	8.00	100	1999	1999	3	79	2,484	
4	0845	KOOL DECK	0	100	0	0	28.00	SF	7.25	7.25	100	1999	1999	3	79	160	
5	0463	FENCE GATE	0	100	0	0	1.00	UT	300.00	300.00	100	1999	1999	3	52	156	

LAND DESCRIPTION

TOTAL OB/XF 10,300

LN	USE CODE	CLS	LAND USE DESCRIPTION	CAP	RD	LOC ZONE	FRONT	DEPTH	TOT LND UTS	UNIT TYPE	DT	DPTH FACT	% COND	TOT ADJ	UNIT PRICE	ADJ UNIT PRICE	LAND VALUE	OTHER ADJUSTMENTS AND NOTES	YEAR	DENSITY	DECL	FRZ	YR	CONSRV
1	000100	C	SFR	100		PUD	0.00	0.00	1.00	LT		1.00	1.00	1.00	375,000.00	375,000.00	375,000							

REVIEW DATE 11/27/2018 BY DJX Total Acres: 0.00 Total Land Value: 375,000 Market: 0 Agricultural: 0 Common: 375,000 PRINTED 08/02/2023 BY SYS