PT OF LOTS 28 & 29
IN OR 939/53
THE RESIDENCE PB 5/149-152

RENEDO JESS S & MARY ANN
8228 RESIDENCE CT
FERNANDINA BEACH, FL 32034

2023

00-00-30-0546-0028-0000

BUILDING CHARACTERISTICS

ELEMENT	CD	CONSTRUCTION
Exterior Wall	17	CB STUCCO 70
Exterior Wall	10	ABOVE AVG 30
Roof Structur	08	IRREGULAR 100
Roof Cover	07	CONC TILE 100
Interior Wall	05	DRYWALL 100
Interior Floo	14	CARPET 60
Interior Floo	11	CLAY TILE 40
Air Condition	03	CENTRAL 100
Heating Type	04	AIR DUCTED 100
Bedrooms		3 100
Bathrooms		3.5 100
Frame	02	WOOD FRAME 100
Stories	2.	2. 100
Units		0 100
Occupancy	00	NONE 100
Quality	04	Quality Level 04
DOR CODE	0100	SINGLE FAMILY
MAP NUM		MKT AREA 10
NEIGHBORHOOD/LOC	10003.00	

AREA TYPE	TOTAL GROSS AREA	PCT OF BASE	TOT ADJ AREA	SUBAREA MARKET VALUE
BAS	1,980	100	1,980	290,370
FGR	494	55	272	39,889
FOP	25	30	8	1,173
FOP	33	30	10	1,467
FOP	133	30	40	5,866
FOP	137	30	41	6,013
FOP	191	30	57	8,360
FUS	946	100	946	138,733
PTO	33	5	2	293
UOP	100	20	20	2,933
TOTALS	4,256		3,413	500,522

MARKET ADJUSTMENTS

TYPE	MDL	EFF. AREA	TOT ADJ PTS	EFF. BASE RATE	REPL. COST NEW	AYB	EYB	ECON	FNCT		NORM	% COND
0500	01	3,413	115.4370	164.50	561,438	2000	2000	0	0	0	10.85	89.15

1 SFR CUST – 100% - 2003 Heated Area: 2926 HX Base Yr 2003

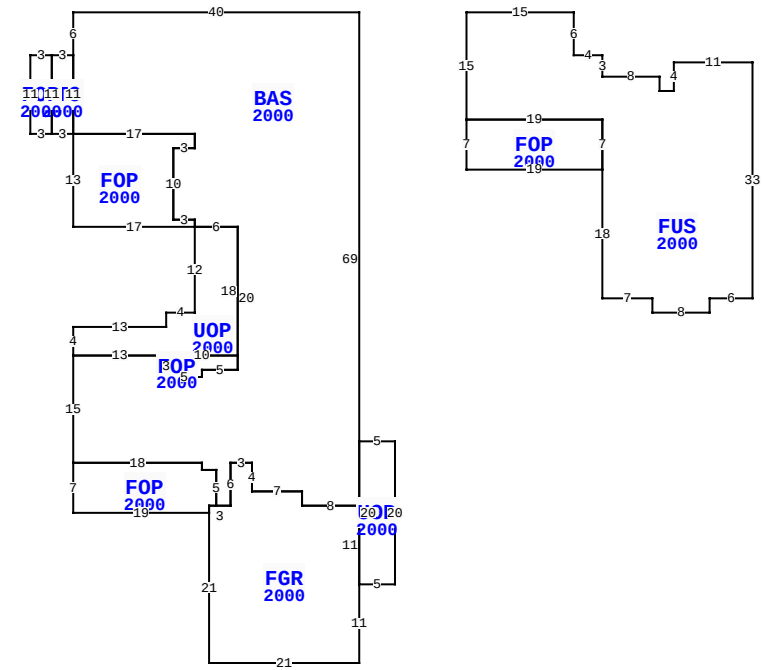

** This building has 11 Sub-Areas

8228 RESIDENCE CT, FERNANDINA BEACH

BLD DATE		LGL DATE	
XF DATE		LAND DATE	
INC DATE		AG DATE	

NASSAU COUNTY PROPERTY

PAGE 1 of 1 5

VALUATION SUMMARY

VALUATION BY		STANDARD
Tax Group: 5	Tax Dist:	
BUILDING MARKET VALUE		500,522
TOTAL MARKET OB/XF VALUE		9,861
TOTAL LAND VALUE - MARKET		375,000
TOTAL MARKET VALUE		885,383
SOH/AGL Deduction		297,530
ASSESSED VALUE		587,853
TOTAL EXEMPTION VALUE	HX HB	50,000
BASE TAXABLE VALUE		537,853
TOTAL JUST VALUE		885,383
NCON VALUE		0
INCOME VALUE		
PREVIOUS YEAR MKT VALUE		754,921

PERMIT NUM	DESCRIPTION	AMT	ISSUED
B9906723	NEW CONSTR	135,198	12/01/1999

SALES DATA

OFF RECORD Number	DATE	TYPE INST	Q / U	V / I	RSN CD	SALE PRICE
0939/0053	7/03/2000	WD	Q	I		523,200
GRANTOR: SUMMER BEACH DEVELOPM						
GRANTEE: RENEDO JESS S & MAR						
0860/1252	12/30/1998	WD	U	V	09	280,000
GRANTOR: CITADEL LIFE & HEALTH						
GRANTEE: SUMMER BEACH DEVELO						

BUILDING NOTES

EXTRA FEATURES

LN	OB/XF CODE	DESCRIPTION	BLD	CAP	L	W	UNITS	UT	Adj R	ADJ UNIT PRICE	ORIG COND	YEAR ON	YEAR ACTUAL	Q	% COND	OB/XF MKT VALUE	NOTES
1	0504	FP-ELECTRI	0	100	0	0	1.00	UT	2,000.00	2,000.00	100	2000	2000	3	85	1,700	
2	0812	CONCRETE C	0	100	0	0	1,089.00	SF	4.00	4.00	100	2000	2000	3	80	3,485	
3	1126	CB/STC 8"	0	100	0	0	662.00	SF	8.00	8.00	100	2000	2000	3	80	4,237	
4	0463	FENCE GATE	0	100	0	0	2.00	UT	300.00	300.00	100	2000	2000	3	55	330	
5	0810	CONCRETE A	0	100	7	3	21.00	SF	6.50	6.50	100	2000	2000	3	80	109	

BUILDING DIMENSIONS

BAS=[YR=2000] W40 S6 PTO=[YR=2000] W3 FOP=[YR=2000] W3 S11 E3 N11 $ S11 E3 N11 $ S11 FOP=[YR=2000] S13 E17 UOP=[YR=2000] S12 W4 S2 W13 S4 E13 FOP=[YR=2000] S3 E5 N1E5 N2 W10$ E10 N18W6$N1 W3 N10E3 N2 W17 $ E17 S2 W3 S10 E3 S1 E6 S20 W5 S1 W5 N3 W13 S15 FOP=[YR=2000] S7 E19 FGR=[YR=2000] S21 E21 N11 UOP=[YR=2000] E5 N20 W5 S20$ N11 W8 N2 W7 N4 W3 S6 W3 S1 $ N1 E1 N5 W2 N1 W18 $ E18 S1 E2 S5 E2 N6 E3 S4 E7 S2 E8 N69$ PTR= E15 FUS=[YR=2000] E15 S6 E4 S3 E8 S2 E2 N4 E11 S33 W6 S2 W8 N2 W7 N18 FOP=[YR=2000] W19 N7 E19 S7 $ N7 W19 N15 $ W15 $.

LAND DESCRIPTION

TOTAL OB/XF 9,861

LN	USE CODE	CLS	LAND USE DESCRIPTION	CAP	RD	LOC ZONE	FRONT	DEPTH	TOT LND UTS	UNIT TYPE	DT	DPTH FACT	% COND	TOT ADJ	UNIT PRICE	ADJ UNIT PRICE	LAND VALUE	OTHER ADJUSTMENTS AND NOTES	YEAR	DENSITY	DECL	FRZ	YR	CONSRV
1	000100	C	SFR	100		PUD	0.00	0.00	1.00	LT		1.00	1.00	1.00	375,000.00	375,000.00	375,000							

REVIEW DATE 11/27/2018 BY DJX Total Acres: 0.00 Total Land Value: 375,000 Market: 0 Agricultural: 0 Common: 375,000 PRINTED 08/02/2023 BY SYS