LOT 5
WALL ESMT PT OR 719/1079
THE RESIDENCE PB 5/149-152

WEBB CAREY REVOCABLE TRUST/WEBB WILLIAM CAREY CO T
8164 RESIDENCE CT
FERNANDINA BEACH, FL 32034

2023

00-00-30-0546-0005-0000

BUILDING CHARACTERISTICS

ELEMENT	CD	CONSTRUCTION
Exterior Wall	16	WD FR STUC 70
Exterior Wall	17	CB STUCCO 30
Roof Structur	08	IRREGULAR 100
Roof Cover	07	CONC TILE 100
Interior Wall	05	DRYWALL 100
Interior Floo	12	HARDWOOD 70
Interior Floo	11	CLAY TILE 30
Air Condition	03	CENTRAL 100
Heating Type	04	AIR DUCTED 100
Bedrooms		4 100
Bathrooms		5 100
Frame	02	WOOD FRAME 100
Stories	3.	3. 100
Units		0 100
Quality	06	Quality Level 06
DOR CODE	0100	SINGLE FAMILY
MAP NUM		MKT AREA 10
NEIGHBORHOOD/LOC	10003.00	

AREA TYPE	TOTAL GROSS AREA	PCT OF BASE	TOT ADJ AREA	SUBAREA MARKET VALUE
BAS	980	100	980	171,302
FGR	720	55	396	69,220
FOP	39	30	12	2,098
FOP	200	30	60	10,488
FOP	200	30	60	10,488
FOP	232	30	70	12,236
FUS	1,694	100	1,694	296,108
FUS	1,700	100	1,700	297,157
UOP	12	20	2	349
UOP	12	20	2	349
TOTALS	5,938		5,006	875,038

MARKET ADJUSTMENTS

TYPE	MDL	EFF. AREA	TOT ADJ PTS	EFF. BASE RATE	REPL. COST NEW	AYB	EYB	ECON	FNCT		NORM	% COND
0900	11	5,006	163.5530	194.22	972,265	2002	2002	0	0	0	10.00	90.00

1 SNGL FAM – 100% - 2006 Heated Area: 4374 HX Base Yr 2006

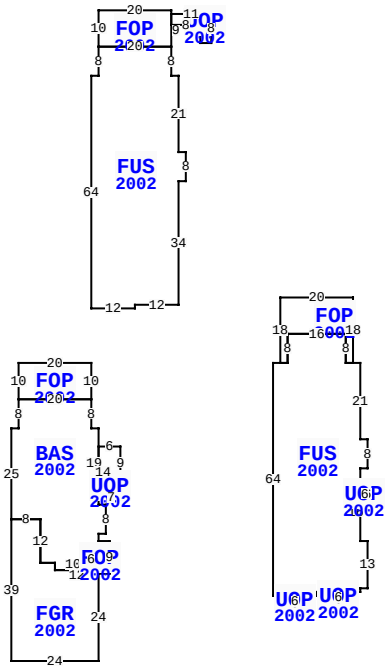

** This building has 13 Sub-Areas

8164 RESIDENCE CT, FERNANDINA BEACH

BLD DATE		LGL DATE	
XF DATE		LAND DATE	
INC DATE		AG DATE	

NASSAU COUNTY PROPERTY

PAGE 1 of 1 5

VALUATION SUMMARY

VALUATION BY		STANDARD
Tax Group: 5	Tax Dist:	
BUILDING MARKET VALUE		875,038
TOTAL MARKET OB/XF VALUE		35,914
TOTAL LAND VALUE - MARKET		1,200,000
TOTAL MARKET VALUE		2,110,952
SOH/AGL Deduction		578,546
ASSESSED VALUE		1,532,406
TOTAL EXEMPTION VALUE	HX HB WR	55,000
BASE TAXABLE VALUE		1,477,406
TOTAL JUST VALUE		2,110,952
NCON VALUE		0
INCOME VALUE		
PREVIOUS YEAR MKT VALUE		1,980,971

PERMIT NUM	DESCRIPTION	AMT	ISSUED
E018098	NEW CONSTR	0	05/01/2001

SALES DATA

OFF RECORD Number	DATE	TYPE INST	Q / U	V / I	RSN CD	SALE PRICE
2619/1145	2/15/2023	TD	U	I	11	100
GRANTOR: WEBB WILLIAM CAREY						
GRANTEE: WEBB CAREY REVOCABL						
1331/0424	7/07/2005	QC	U	I	06	100
GRANTOR: FISHER ARLENE RUTH						
GRANTEE: WEBB WILLIAM C & JU						

BUILDING NOTES

BUILDING DIMENSIONS

FOP=[YR=2002] W20 S10 BAS=[YR=2002] S8 W2 S25 FGR=[YR=2002] S39 E24 N24 FOP=[YR=2002] E3 N9 W3 S2 W2 S6 E2 S1$ N1W12 N2 W4 N12 W8 $ E8 S12 E4 S2 E10 N6 E2 N4 E2 N8 W2 N2 UOP=[YR=2002] E7 N5 W1 N9 W6 S14 $ N19 W2 N8 W20 $ E20 N10 $ PTR=N15 FUS=[YR=2002] N64 E2 N8 FOP=[YR=2002] N10 E20 S1 UOP=[YR=2002] E11 S8 W3 N5 W8 N3 $ S9 W20 $ E20 S8 E2 S21 E2 S8 W2 S34 W12 S1 W12 $ S15 $ PTR= E50 FUS=[YR=2002] E2 FOP=[YR=2002] N18 E20 S18 W2 N8 W16 S8 W2 $ E2 N8 E16 S8 E4 S21 E2 S8 W2 S4 UOP=[YR=2002] E2 S6 W2 N6 $ S16 E2 S13 W2 S1 W3 UOP=[YR=2002] S2 W6 N2 E6 $ W9 S1 W3 UOP=[YR=2002] S2 W6 N2 E6 $ W9 N64 $ W50 $.

EXTRA FEATURES

LN	OB/XF CODE	DESCRIPTION	BLD	CAP	L	W	UNITS	UT	Adj R	ADJ UNIT PRICE	ORIG COND	YEAR ON	YEAR ACTUAL	Q	% COND	OB/XF MKT VALUE	NOTES
1	0504	FP-ELECTRI	0	100	0	0	1.00	UT	2,000.00	2,000.00	100	2002	2002	3	87	1,740	
2	0825	BRICK	0	100	0	0	783.00	SF	12.50	12.50	100	2002	2002	3	95	9,298	
3	0825	BRICK	0	100	0	0	571.00	SF	12.50	12.50	100	2002	2002	3	95	6,781	
4	0810	CONCRETE A	0	100	0	0	237.00	SF	6.50	6.50	100	2002	2002	3	83	1,279	
5	1126	CB/STC 8"	0	100	0	0	1,013.00	SF	8.00	8.00	100	2002	2002	3	83	6,726	
6	1075	TRELLIS G	0	100	4	2	8.00	SF	35.00	35.00	100	2002	2002	3	32	90	
7	0410	ELEVATOR	0	100	0	0	1.00	UT	10,000.00	10,000.00	100	2002	2002	3	100	10,000	

LAND DESCRIPTION

TOTAL OB/XF 35,914

LN	USE CODE	CLS	LAND USE DESCRIPTION	CAP	RD	LOC ZONE	FRONT	DEPTH	TOT LND UTS	UNIT TYPE	DT	DPTH FACT	% COND	TOT ADJ	UNIT PRICE	ADJ UNIT PRICE	LAND VALUE	OTHER ADJUSTMENTS AND NOTES	YEAR	DENSITY	DECL	FRZ	YR	CONSRV
1	000120	C	SFR OCN FT	100		PUD	0.00	0.00	1.00	LT		1.00	1.00	1.00	1,200,000.00	1,200,000.00	1,200,000							

REVIEW DATE 11/27/2018 BY DJX Total Acres: 0.00 Total Land Value: 1,200,000 Market: 0 Agricultural: 0 Common: 1,200,000 PRINTED 08/02/2023 BY SYS