LOT 4
WALL ESMT PT OR 719/1079
THE RESIDENCE PB 5/149-152

**ELKSNIS DARRYL A & KATHRYN M**
3946 MCGRITS BLVD
JACKSONVILLE, FL 32210

**2023**

**00-00-30-0546-0004-0000**

## NASSAU COUNTY PROPERTY



### BUILDING CHARACTERISTICS

| ELEMENT | CD | CONSTRUCTION |
|---|---|---|
| Exterior Wall | 16 | WD FR STUC 70 |
| Exterior Wall | 17 | CB STUCCO 30 |
| Roof Structur | 08 | IRREGULAR 100 |
| Roof Cover | 07 | CONC TILE 100 |
| Interior Wall | 05 | DRYWALL 100 |
| Interior Floo | 12 | HARDWOOD 60 |
| Interior Floo | 14 | CARPET 40 |
| Air Condition | 03 | CENTRAL 100 |
| Heating Type | 04 | AIR DUCTED 100 |
| Bedrooms | | 5 100 |
| Bathrooms | | 4 100 |
| Frame | 02 | WOOD FRAME 100 |
| Stories | 3. | 3. 100 |
| Units | | 0 100 |
| Quality | 06 | Quality Level 06 |
| DOR CODE | 0100 | SINGLE FAMILY |
| MAP NUM | | MKT AREA 10 |
| NEIGHBORHOOD/LOC | 10003.00 | |

| AREA TYPE | TOTAL GROSS AREA | PCT OF BASE | TOT ADJ AREA | SUBAREA MARKET VALUE |
|---|---|---|---|---|
| BAS | 874 | 100 | 874 | 135,256 |
| FGR | 578 | 55 | 318 | 49,212 |
| FOP | 30 | 30 | 9 | 1,393 |
| FOP | 200 | 30 | 60 | 9,285 |
| FOP | 200 | 30 | 60 | 9,285 |
| FOP | 200 | 30 | 60 | 9,285 |
| FUS | 1,512 | 100 | 1,512 | 233,989 |
| FUS | 1,512 | 100 | 1,512 | 233,989 |
| UOP | 48 | 20 | 10 | 1,548 |
| UOP | 75 | 20 | 15 | 2,321 |
| TOTALS | 5,229 | | 4,430 | 685,564 |

### MARKET ADJUSTMENTS

| TYPE | MDL | EFF. AREA | TOT ADJ PTS | EFF. BASE RATE | REPL. COST NEW | AYB | EYB | ECON | FNCT | | NORM | % COND |
|---|---|---|---|---|---|---|---|---|---|---|---|---|
| 0900 | 11 | 4,430 | 144.8014 | 171.95 | 761,738 | 2002 | 2002 | 0 | 0 | 0 | 10.00 | 90.00 |

2 SNGL FAM – 0% - 0 Heated Area: 3898 HX Base Yr

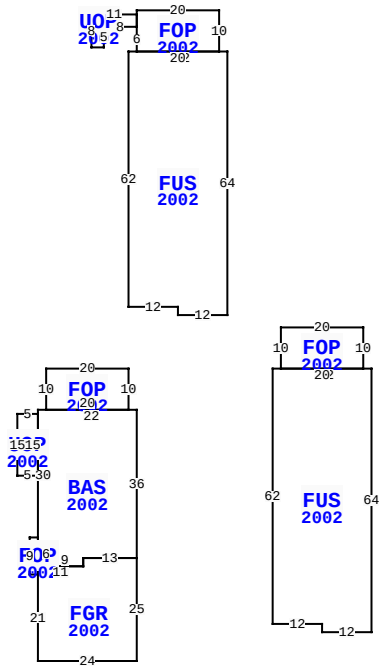


8160 RESIDENCE CT, FERNANDINA BEACH

| | | | |
|---|---|---|---|
| BLD DATE | | LGL DATE | |
| XF DATE | | LAND DATE | |
| INC DATE | | AG DATE | |

### VALUATION SUMMARY

| | |
|---|---|
| VALUATION BY | STANDARD |
| Tax Group: 5 | Tax Dist: |
| BUILDING MARKET VALUE | 685,564 |
| TOTAL MARKET OB/XF VALUE | 40,983 |
| TOTAL LAND VALUE - MARKET | 1,200,000 |
| TOTAL MARKET VALUE | 1,926,547 |
| SOH/AGL Deduction | 0 |
| ASSESSED VALUE | 1,926,547 |
| TOTAL EXEMPTION VALUE | 0 |
| BASE TAXABLE VALUE | 1,926,547 |
| TOTAL JUST VALUE | 1,926,547 |
| NCON VALUE | 0 |
| INCOME VALUE | |
| PREVIOUS YEAR MKT VALUE | 1,820,260 |

| PERMIT NUM | DESCRIPTION | AMT | ISSUED |
|---|---|---|---|
| | | | |

### SALES DATA

| OFF RECORD Number | DATE | TYPE INST | Q / U | V / I | RSN CD | SALE PRICE |
|---|---|---|---|---|---|---|
| 2453/1586 | 4/16/2021 | WD | Q | I | 01 | 2,025,000 |
| GRANTOR: PERLIS LYNETTE H REVO | | | | | | |
| GRANTEE: ELKSNIS DARRYL A & | | | | | | |
| 2292/1741 | 7/23/2019 | WD | U | I | 11 | 100 |
| GRANTOR: PERLIS LYNETTE H & MA | | | | | | |
| GRANTEE: LYNETTE H PERLIS RE | | | | | | |

### BUILDING NOTES

### BUILDING DIMENSIONS

FOP=[YR=2002] W20 S10 BAS=[YR=2002] W2 S1 UOP=[YR=2002] W5 S15 E5 N15$ S30 FOP=[YR=2002] W2 S9 E2 FGR=[YR=2002] S21 E24 N25 W13 S2 W11 S2$ N2 E2 N6 W2 N1$ S1 E2 S6 E9 N2 E13 N36 W22$ E20 N10$ PTR=N15 FUS=[YR=2002] N62 E2 FOP=[YR=2002] N6 UOP=[YR=2002] W8 S5 W3 N8 E11 S3$ N4 E20 S10 W20$ E22 S64 W12 N2 W12$ S15$ PTR=E35 FUS=[YR=2002] E2 FOP=[YR=2002] N10 E20 S10 W20$ E22 S64 W12 N2 W12 N62$ W35$ .

### EXTRA FEATURES

| LN | OB/XF CODE | DESCRIPTION | BLD | CAP | L | W | UNITS | UT | Adj R | ADJ UNIT PRICE | ORIG COND | YEAR ON | YEAR ACTUAL | Q | % COND | OB/XF MKT VALUE | NOTES |
|---|---|---|---|---|---|---|---|---|---|---|---|---|---|---|---|---|---|
| 8 | 0858 | SCULP CONC | 0 | 0 | 0 | 0 | 1,247.00 | SF | 13.00 | 13.00 | 100 | 2002 | 2002 | 3 | 95 | 15,400 | |
| 9 | 0858 | SCULP CONC | 0 | 0 | 0 | 0 | 507.00 | SF | 13.00 | 13.00 | 100 | 2002 | 2002 | 3 | 95 | 6,261 | |
| 10 | 1126 | CB/STC 8" | 0 | 0 | 0 | 0 | 707.00 | SF | 8.00 | 8.00 | 100 | 2002 | 2002 | 3 | 83 | 4,694 | |
| 11 | 0445 | BOX FNC 5' | 0 | 0 | 0 | 0 | 15.00 | LF | 8.10 | 8.10 | 100 | 2002 | 2002 | 3 | 21 | 26 | |
| 12 | 0810 | CONCRETE A | 0 | 0 | 0 | 0 | 208.00 | SF | 6.50 | 6.50 | 100 | 2002 | 2002 | 3 | 83 | 1,122 | |
| 13 | 0410 | ELEVATOR | 0 | 0 | 0 | 0 | 1.00 | UT | 10,000.00 | 10,000.00 | 100 | 2002 | 2002 | 3 | 100 | 10,000 | |
| 14 | 0504 | FP-ELECTRI | 0 | 0 | 0 | 0 | 2.00 | UT | 2,000.00 | 2,000.00 | 100 | 2002 | 2002 | 3 | 87 | 3,480 | |

### LAND DESCRIPTION

TOTAL OB/XF 40,983

| LN | USE CODE | CLS | LAND USE DESCRIPTION | CAP | RD | LOC ZONE | FRONT | DEPTH | TOT LND UTS | UNIT TYPE | DT | DPTH FACT | % COND | TOT ADJ | UNIT PRICE | ADJ UNIT PRICE | LAND VALUE | OTHER ADJUSTMENTS AND NOTES | YEAR | DENSITY | DECL | FRZ | YR | CONSRV |
|---|---|---|---|---|---|---|---|---|---|---|---|---|---|---|---|---|---|---|---|---|---|---|---|---|
| 1 | 000120 | C | SFR OCN FT | 0 | | PUD | 0.00 | 0.00 | 1.00 | LT | | 1.00 | 1.00 | 1.00 | 1,200,000.00 | 1,200,000.00 | 1,200,000 | | | | | | | |

REVIEW DATE 11/27/2018 BY DJX Total Acres: 0.00 Total Land Value: 1,200,000 Market: 0 Agricultural: 0 Common: 1,200,000 PRINTED 08/02/2023 BY SYS