LOT 2
IN OR 1970/1882
WALL ESMT PT OR 719/1079

SMERAGLINOLO ANTONIO & KATHLEEN A
8152 RESIDENCE CT
FERNANDINA BEACH, FL 32034

2023

00-00-30-0546-0002-0000

BUILDING CHARACTERISTICS

ELEMENT	CD	CONSTRUCTION
Exterior Wall	16	WD FR STUC 70
Exterior Wall	17	CB STUCCO 30
Roof Structur	08	IRREGULAR 100
Roof Cover	07	CONC TILE 100
Interior Wall	05	DRYWALL 100
Interior Floo	12	HARDWOOD 60
Interior Floo	14	CARPET 40
Air Condition	03	CENTRAL 100
Heating Type	04	AIR DUCTED 100
Bedrooms		3 100
Bathrooms		4.5 100
Frame	02	WOOD FRAME 100
Stories	3.	3. 100
Units		0 100
Quality	06	Quality Level 06
DOR CODE	0100	SINGLE FAMILY
MAP NUM		MKT AREA 10
NEIGHBORHOOD/LOC	10003.00	

AREA TYPE	TOTAL GROSS AREA	PCT OF BASE	TOT ADJ AREA	SUBAREA MARKET VALUE
BAS	805	100	805	123,470
FEP	200	80	160	24,541
FGR	554	55	305	46,780
FOP	14	30	4	614
FOP	200	30	60	9,203
FOP	200	30	60	9,203
FST	115	55	63	9,663
FUS	1,500	100	1,500	230,069
FUS	1,500	100	1,500	230,069
UOP	51	20	10	1,534
TOTALS	5,393		4,518	692,968

MARKET ADJUSTMENTS

TYPE	MDL	EFF. AREA	TOT ADJ PTS	EFF. BASE RATE	REPL. COST NEW	AYB	EYB	ECON	FNCT		NORM	% COND
0900	11	4,518	142.7230	169.48	765,711	2003	2003	0	0	0	9.50	90.50

1 SNGL FAM – 100% - 2017 Heated Area: 3805 HX Base Yr 2017

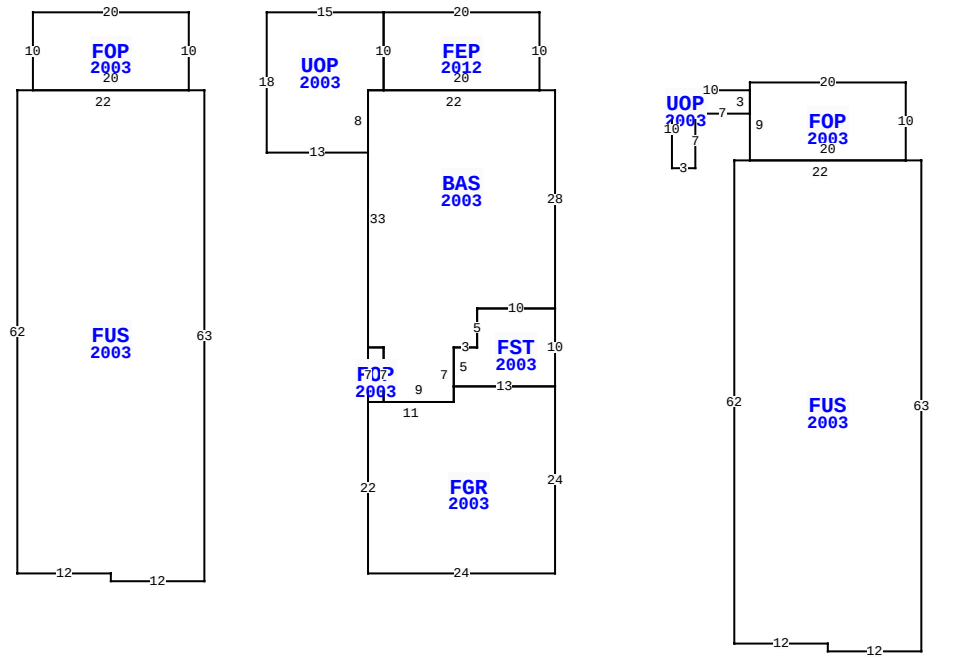

** This building has 11 Sub-Areas

8152 RESIDENCE CT, FERNANDINA BEACH

BLD DATE		LGL DATE	
XF DATE		LAND DATE	
INC DATE		AG DATE	

NASSAU COUNTY PROPERTY

PAGE 1 of 1 5

VALUATION SUMMARY

VALUATION BY		STANDARD
Tax Group: 5	Tax Dist:	
BUILDING MARKET VALUE		692,968
TOTAL MARKET OB/XF VALUE		22,854
TOTAL LAND VALUE - MARKET		1,200,000
TOTAL MARKET VALUE		1,915,822
SOH/AGL Deduction		497,115
ASSESSED VALUE		1,418,707
TOTAL EXEMPTION VALUE	HX HB	50,000
BASE TAXABLE VALUE		1,368,707
TOTAL JUST VALUE		1,915,822
NCON VALUE		0
INCOME VALUE		
PREVIOUS YEAR MKT VALUE		1,823,846

PERMIT NUM	DESCRIPTION	AMT	ISSUED
B0209225	NEW CONSTR	537,000	01/01/2002

SALES DATA

OFF RECORD Number	DATE	TYPE INST	Q / U	V / I	RSN CD	SALE PRICE
1970/1882	3/30/2015	WD	Q	I	02	1,750,000
GRANTOR: AMOS WILLIAM L JR & B						
GRANTEE: SMERAGLINOLO ANTONI						
1464/1826	12/12/2006	WD	Q	I		2,210,000
GRANTOR: WATT THOMAS J & JANE						
GRANTEE: AMOS WILLIAM L JR &						

BUILDING NOTES

BUILDING DIMENSIONS

BAS=[YR=2003] W2 FEP=[YR=2012] N10 W20 UOP=[YR=2003] W15 S18 E13 N8 E2 N10 $ S10 E20 $ W22 S33 FOP=[YR=2003] S7 FGR=[YR=2003] S22 E24 N24 FST=[YR=2003] N10 W10 S5 W3 S5 E13$ W13 S2 W11 $ E2 N7 W2 $ E2 S7 E9 N7 E3 N5 E10 N28 $ PTR= E15 UOP=[YR=2003] E10 FOP=[YR=2003] N1 E20 S10 FUS=[YR=2003] E2 S63 W12 N1 W12 N62 E22 $ W20 N9 $ S3 W7 S7 W3 N10 $ W15 $ PTR= W45 FUS=[YR=2003] W2 FOP=[YR=2003] N10 W20 S10 E20 $ W22 S62 E12 S1 E12 N63 $ E45 $.

EXTRA FEATURES

LN	OB/XF CODE	DESCRIPTION	BLD	CAP	L	W	UNITS	UT	Adj R	ADJ UNIT PRICE	ORIG COND	YEAR ON	YEAR ACTUAL	Q	% COND	OB/XF MKT VALUE	NOTES
1	0811	CONCRETE B	0	100	0	0	697.00	SF	5.20	5.20	100	2003	2003	3	84	3,044	
2	0810	CONCRETE A	0	100	0	0	149.00	SF	6.50	6.50	100	2003	2003	3	84	814	
3	0835	QUARY TILE	0	100	0	0	141.00	SF	10.00	10.00	100	2003	2003	3	84	1,184	
4	1126	CB/STC 8"	0	100	0	0	787.00	SF	8.00	8.00	100	2003	2003	3	84	5,289	
5	0444	BOX FNC 4'	0	100	0	0	14.00	LF	6.50	6.50	100	2003	2003	3	22	20	
6	0810	CONCRETE A	0	100	8	4	32.00	SF	6.50	6.50	100	2003	2003	3	84	175	
7	0825	BRICK	0	100	0	0	158.00	SF	12.50	12.50	100	2003	2003	3	96	1,896	
8	0825	BRICK	0	100	12	3	36.00	SF	12.50	12.50	100	2003	2003	3	96	432	
9	0410	ELEVATOR	0	100	0	0	1.00	UT	10,000.00	10,000.00	100	2003	2003	3	100	10,000	

LAND DESCRIPTION

TOTAL OB/XF 22,854

LN	USE CODE	CLS	LAND USE DESCRIPTION	CAP	RD	LOC ZONE	FRONT	DEPTH	TOT LND UTS	UNIT TYPE	DT	DPTH FACT	% COND	TOT ADJ	UNIT PRICE	ADJ UNIT PRICE	LAND VALUE	OTHER ADJUSTMENTS AND NOTES	YEAR	DENSITY	DECL	FRZ	YR	CONSRV
1	000120	C	SFR OCN FT	100		PUD	0.00	0.00	1.00	LT		1.00	1.00	1.00	1,200,000.00	1,200,000.00	1,200,000							

REVIEW DATE 11/27/2018 BY DJX Total Acres: 0.00 Total Land Value: 1,200,000 Market: 0 Agricultural: 0 Common: 1,200,000 PRINTED 08/02/2023 BY SYS