LOTS 6 & 8
RAYON TERRACE PB 3/31

BARNARD CODY A/BARNARD DENISE
2040 RAYON RD
FERNANDINA BEACH, FL 32034

2023

00-00-30-0540-0006-0000

NASSAU COUNTY PROPERTY

BUILDING CHARACTERISTICS

ELEMENT	CD	CONSTRUCTION
Exterior Wall	05	AVERAGE 100
Roof Structur	03	GABLE/HIP 100
Roof Cover	03	COMP SHNGL 100
Interior Wall	03	PLASTER 100
Interior Floo	14	CARPET 70
Interior Floo	07	CORK/VTILE 30
Air Condition	03	CENTRAL 100
Heating Type	04	AIR DUCTED 100
Bedrooms		3 100
Bathrooms		1.5 100
Frame	02	WOOD FRAME 100
Stories	1.	1. 100
Units		0 100
BUD8 Adjustme	05	DIST 1A 100
Occupancy	00	NONE 100
Quality	03	Quality Level 03
DOR CODE	0100	SINGLE FAMILY
MAP NUM		MKT AREA 02
NEIGHBORHOOD/LOC	2018.00	

AREA TYPE	TOTAL GROSS AREA	PCT OF BASE	TOT ADJ AREA	SUBAREA MARKET VALUE
BAS	1,362	100	1,362	107,645
DCK	130	10	13	1,027
FOP	30	30	9	711
TOTALS	1,522		1,384	109,384

MARKET ADJUSTMENTS

TYPE	MDL	EFF. AREA	TOT ADJ PTS	EFF. BASE RATE	REPL. COST NEW	AYB	EYB	ECON	FNCT		NORM	% COND
0100	01	1,384	113.3600	102.31	141,597	1950	1960	0	0	0	22.75	77.25

1 SINGLE FAM – 100% - 2022 Heated Area: 1362 HX Base Yr 2022

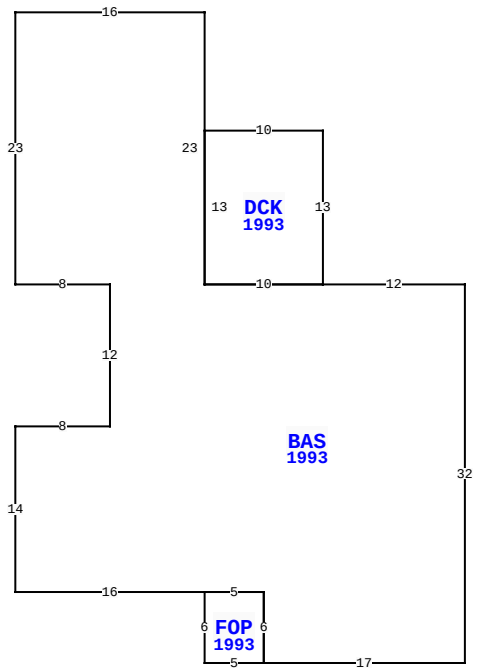

2040 RAYON RD, FERNANDINA BEACH

BLD DATE		LGL DATE	
XF DATE		LAND DATE	
INC DATE		AG DATE	

VALUATION SUMMARY

VALUATION BY		STANDARD
Tax Group: 8	Tax Dist:	
BUILDING MARKET VALUE		109,384
TOTAL MARKET OB/XF VALUE		1,388
TOTAL LAND VALUE - MARKET		100,000
TOTAL MARKET VALUE		210,772
SOH/AGL Deduction		0
ASSESSED VALUE		210,772
TOTAL EXEMPTION VALUE	HX HB	50,000
BASE TAXABLE VALUE		160,772
TOTAL JUST VALUE		210,772
NCON VALUE		0
INCOME VALUE		
PREVIOUS YEAR MKT VALUE		210,065

PERMIT NUM	DESCRIPTION	AMT	ISSUED
7343	REMODEL	3,500	06/24/1991

SALES DATA

OFF RECORD Number	DATE	TYPE INST	Q / U	V / I	RSN CD	SALE PRICE
2495/0997	9/10/2021	WD	U	I	16	285,000
GRANTOR: ROWE DONALD E ET AL						
GRANTEE: BARNARD CODY & DENI						
1514/0470	7/23/2007	WD	U	I	07	100
GRANTOR: ROWE DONALD E & DENIS						
GRANTEE: BARNARD CODY A L/E						

BUILDING NOTES

BUILDING DIMENSIONS

BAS=[YR=1993] W12 DCK=[YR=1993] N13 W10 S13 E10 $ W10 N23 W16 S23 E8 S12 W8 S14 E16 FOP=[YR=1993] S6 E5 N6 W5 $ E5 S6 E17 N32 $.

EXTRA FEATURES

LN	OB/XF CODE	DESCRIPTION	BLD	CAP	L	W	UNITS	UT	Adj R	ADJ UNIT PRICE	ORIG COND	YEAR ON	YEAR ACTUAL	Q	% COND	OB/XF MKT VALUE	NOTES
1	0940	SHEDS/PORT	0	100	6	10	60.00	SF	20.10	20.10	100	2000	2000	3	20	241	
2	0350	CARPORT WD	0	100	6	10	60.00	SF	8.58	8.58	100	2000	2000	3	20	103	
3	0350	CARPORT WD	0	100	6	10	60.00	SF	8.58	8.58	100	2000	2000	3	20	103	
4	0940	SHEDS/PORT	0	100	16	12	192.00	SF	19.50	19.50	100	1995	1995	3	20	749	
5	0351	CARPORT MT	0	100	12	20	240.00	SF	4.00	4.00	100	2000	2000	3	20	192	

LAND DESCRIPTION

TOTAL OB/XF 1,388

LN	USE CODE	CLS	LAND USE DESCRIPTION	CAP	RD	LOC ZONE	FRONT	DEPTH	TOT LND UTS	UNIT TYPE	DT	DPTH FACT	% COND	TOT ADJ	UNIT PRICE	ADJ UNIT PRICE	LAND VALUE	OTHER ADJUSTMENTS AND NOTES	YEAR	DENSITY	DECL	FRZ	YR	CONSRV
1	000100	C	SFR	100		RS-2	100.00	152.00	100.00	FF		1.00	1.00	1.00	1,000.00	1,000.00	100,000							

REVIEW DATE 02/13/2018 BY DJX Total Acres: 0.00 Total Land Value: 100,000 Market: 0 Agricultural: 0 Common: 100,000 PRINTED 08/02/2023 BY SYS