LOT 24
PLANTATION POINT PB 5/269

WOOD HERMAN E JR & JOANNA P
1241 HARRISON POINT TRAIL
FERNANDINA BEACH, FL 32034

2023

00-00-30-0518-0024-0000

NASSAU COUNTY PROPERTY

BUILDING CHARACTERISTICS

ELEMENT	CD	CONSTRUCTION
Exterior Wall	16	WD FR STUC 100
Roof Structur	08	IRREGULAR 100
Roof Cover	03	COMP SHNGL 100
Interior Wall	05	DRYWALL 100
Interior Floo	11	CLAY TILE 60
Interior Floo	14	CARPET 40
Air Condition	03	CENTRAL 100
Heating Type	04	AIR DUCTED 100
Bedrooms		4 100
Bathrooms		4 100
Frame	02	WOOD FRAME 100
Stories	2.	2. 100
Units		0 100
Occupancy	00	NONE 100
Quality	06	Quality Level 06

DOR CODE	0100	SINGLE FAMILY	
MAP NUM		MKT AREA	03
NEIGHBORHOOD/LOC	3036.00		

AREA TYPE	TOTAL GROSS AREA	PCT OF BASE	TOT ADJ AREA	SUBAREA MARKET VALUE
BAS	2,177	100	2,177	357,821
FGR	464	55	255	41,913
FOP	72	30	22	3,616
FOP	282	30	85	13,971
FUS	940	100	940	154,503
TOTALS	3,935		3,479	571,823

MARKET ADJUSTMENTS

TYPE	MDL	EFF. AREA	TOT ADJ PTS	EFF. BASE RATE	REPL. COST NEW	AYB	EYB	ECON	FNCT		NORM	% COND
0500	01	3,479	126.7484	180.62	628,377	2004	2004	0	0	0	9.00	91.00

1 SFR CUST – 100% - 2020 Heated Area: 3117 HX Base Yr 2020

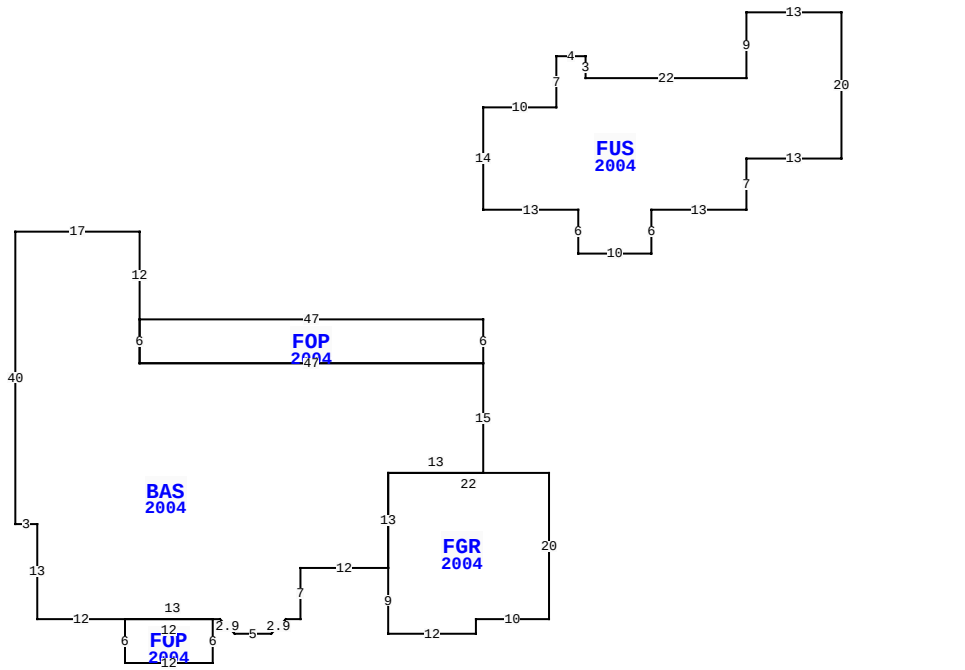

1241 HARRISON POINT TRL, FERNANDINA BEACH

BLD DATE		LGL DATE	
XF DATE		LAND DATE	
INC DATE		AG DATE	

NASSAU COUNTY PROPERTY — VALUATION SUMMARY

VALUATION BY		STANDARD
Tax Group: 8	Tax Dist:	
BUILDING MARKET VALUE		571,823
TOTAL MARKET OB/XF VALUE		39,147
TOTAL LAND VALUE - MARKET		350,000
TOTAL MARKET VALUE		960,970
SOH/AGL Deduction		244,758
ASSESSED VALUE		716,212
TOTAL EXEMPTION VALUE	HX HB	50,000
BASE TAXABLE VALUE		666,212
TOTAL JUST VALUE		960,970
NCON VALUE		0
INCOME VALUE		
PREVIOUS YEAR MKT VALUE		797,982

PERMIT NUM	DESCRIPTION	AMT	ISSUED
B0413081	XFOB	6,200	06/01/2004
B0412194	NEW CONSTR	230,143	01/01/2004
R045765	REPAIR/RRF	10,000	01/01/2004

SALES DATA

OFF RECORD Number	DATE	TYPE INST	Q U	V I	RSN CD	SALE PRICE
2311/0970	10/10/2019	WD	Q	I	02	739,000
GRANTOR: GRAY PATRICK E & MARC						
GRANTEE: WOOD HERMAN E JR &						
1848/0666	3/28/2013	WD	Q	I	02	650,000
GRANTOR: GLOVER ALBERT J & DOR						
GRANTEE: GRAY PATRICK E & MA						

BUILDING NOTES

BUILDING DIMENSIONS

FOP=[YR=2004] W47 BAS=[YR=2004] N12 W17 S40 E3 S13 E12
FOP=[YR=2004] S6 E12 N6 W12$ E13 D2 R2 E5 U2 R2 E2 N7
E12FGR=[YR=2004] S9 E12 N2 E10 N20 W22 S13$ N13 E13 N15 W47
N6$ S6 E47 N6$ PTR=N15 FUS=[YR=2004] N14 E10 N7 E4 S3 E22 N9
E13 S20 W13 S7 W13 S6 W10 N6 W13$ S15$.

EXTRA FEATURES

LN	OB/XF CODE	DESCRIPTION	BLD	CAP	L	W	UNITS	UT	Adj R	ADJ UNIT PRICE	ORIG COND	YEAR ON	YEAR ACTUAL	Q	% COND	OB/XF MKT VALUE	NOTES
1	0500	FP-PRE FAB	0	100	0	0	1.00	UT	3,500.00	3,500.00	100	2004	2004	3	89	3,115	
2	0855	CONC PAVER	0	100	0	0	1,912.00	SF	10.00	10.00	100	2004	2004	3	86	16,443	
3	0855	CONC PAVER	0	100	0	0	208.00	SF	10.00	10.00	100	2004	2004	3	86	1,789	
4	0861	POOL GUNIT	0	100	0	0	303.00	SF	85.00	85.00	100	2004	2004	3	40	10,302	
5	0877	JACUZZI	0	100	0	0	1.00	UT	1,000.00	1,000.00	100	2004	2004	3	24	240	
6	0910	SCRN RM L	0	100	0	0	816.00	SF	15.00	15.00	100	2004	2004	3	24	2,938	
7	0855	CONC PAVER	0	100	0	0	386.00	SF	10.00	10.00	100	2004	2004	3	86	3,320	
8	0471	VINYL FNC	0	100	0	0	27.00	LF	32.00	32.00	100	2004	2004	3	66	570	
9	0845	KOOL DECK	0	100	0	0	69.00	SF	7.25	7.25	100	2004	2004	3	86	430	

LAND DESCRIPTION

TOTAL OB/XF 39,147

LN	USE CODE	CLS	LAND USE DESCRIPTION	CAP	RD	LOC ZONE	FRONT	DEPTH	TOT LND UTS	UNIT TYPE	DT	DPTH FACT	% COND	TOT ADJ	UNIT PRICE	ADJ UNIT PRICE	LAND VALUE	OTHER ADJUSTMENTS AND NOTES	YEAR	DENSITY	DECL	FRZ	YR	CONSRV
1	000100	C	SFR	100	0003	RS-1	0.00	0.00	1.00	UT		1.00	1.00	1.00	350,000.00	350,000.00	350,000							

REVIEW DATE 02/06/2018 BY DJX Total Acres: 0.00 Total Land Value: 350,000 Market: 0 Agricultural: 0 Common: 350,000 PRINTED 08/02/2023 BY SYS