LOT 16
PLANTATION POINT PB 5/269

EASTER DENNIS & KIM ANN
1244 HARRISON POINT TRAIL
FERNANDINA BEACH, FL 32034

2023

00-00-30-0518-0016-0000

NASSAU COUNTY PROPERTY

BUILDING CHARACTERISTICS

ELEMENT	CD	CONSTRUCTION
Exterior Wall	16	WD FR STUC 70
Exterior Wall	12	CEDAR 30
Roof Structur	03	GABLE/HIP 100
Roof Cover	03	COMP SHNGL 100
Interior Wall	05	DRYWALL 100
Interior Floo	14	CARPET 70
Interior Floo	11	CLAY TILE 30
Air Condition	03	CENTRAL 100
Heating Type	04	AIR DUCTED 100
Bedrooms		4 100
Bathrooms		4 100
Frame	02	WOOD FRAME 100
Stories	2.	2. 100
Units		0 100
Quality	04	Quality Level 04
DOR CODE	0100	SINGLE FAMILY
MAP NUM		MKT AREA 03
NEIGHBORHOOD/LOC	3036.00	

AREA TYPE	TOTAL GROSS AREA	PCT OF BASE	TOT ADJ AREA	SUBAREA MARKET VALUE
BAS	1,323	100	1,323	347,421
BAS	120	100	120	31,512
BAS	425	100	425	111,605
BAS	238	100	238	62,499
FGR	530	55	292	76,679
FOP	36	30	11	2,889
FOP	112	30	34	8,929
FOP	160	30	48	12,605
FST	177	55	97	25,472
FUS	1,022	100	1,022	268,378
TOTALS	4,167		3,612	948,515

MARKET ADJUSTMENTS

TYPE	MDL	EFF. AREA	TOT ADJ PTS	EFF. BASE RATE	REPL. COST NEW	AYB	EYB	ECON	FNCT		NORM	% COND
0500	12	3,612	188.0424	267.96	967,872	1992	2018	0	0	0	2.00	98.00

1 SFR CUST – 100% - 2023 Heated Area: 3128 HX Base Yr 2023

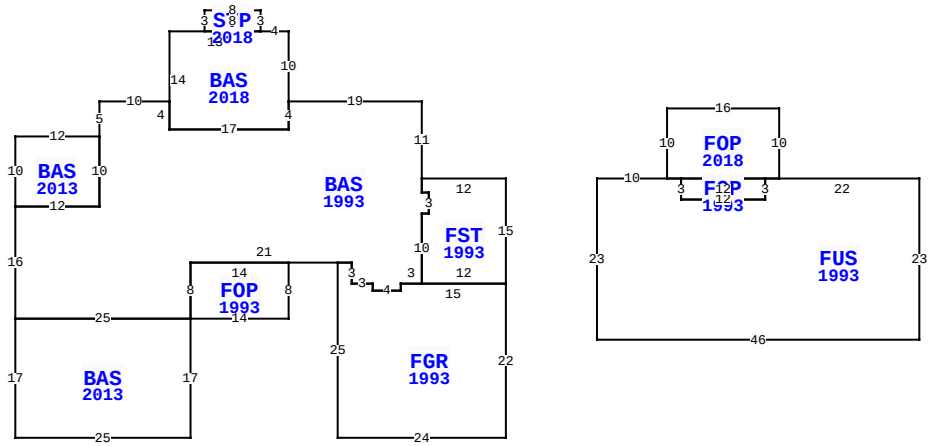

** This building has 11 Sub-Areas

1244 HARRISON POINT TRL, FERNANDINA BEACH

BLD DATE		LGL DATE	
XF DATE		LAND DATE	
INC DATE		AG DATE	

VALUATION SUMMARY

VALUATION BY		STANDARD
Tax Group: 8	Tax Dist:	
BUILDING MARKET VALUE		948,515
TOTAL MARKET OB/XF VALUE		3,391
TOTAL LAND VALUE - MARKET		500,000
TOTAL MARKET VALUE		1,451,906
SOH/AGL Deduction		0
ASSESSED VALUE		1,451,906
TOTAL EXEMPTION VALUE	HX HB	50,000
BASE TAXABLE VALUE		1,401,906
TOTAL JUST VALUE		1,451,906
NCON VALUE		0
INCOME VALUE		
PREVIOUS YEAR MKT VALUE		783,795

PERMIT NUM	DESCRIPTION	AMT	ISSUED
B1801319	SUNROOM	45,000	02/06/2018
B1711357	DEMO STAIR	0	12/20/2017
B1326746	BATH	57,732	01/01/2013
P1316327	ELEC	0	01/01/2013
7651	NEW CONSTR	192,120	10/31/1991

SALES DATA

OFF RECORD Number	DATE	TYPE INST	Q / U	V / I	RSN CD	SALE PRICE
2601/0856	11/07/2022	WD	Q	I	01	1,850,000
GRANTOR: QUATTLEBAUM JOSEPH M						
GRANTEE: EASTER DENNIS & KIM						
2147/1062	9/21/2017	WD	Q	I	02	614,300
GRANTOR: JONES R LANIER & LUCY						
GRANTEE: QUATTLEBAUM JOSEPH						

BUILDING NOTES

BUILDING DIMENSIONS

BAS=[YR=1993] N11 W19 BAS=[YR=2018] N10 W4 STP=[YR=2018] N3 W8 S3 E8$ W13 S14 E17 N4$ S4 W17 N4 W10 S5 BAS=[YR=2013] W12 S10 E12 N10$ S10 W12 S16 BAS=[YR=2013] S17 E25 N17 W25$ E25 FOP=[YR=1993] E14 N8 W14 S8 $ N8E21 FGR=[YR=1993] S25 E24 N22 FST=[YR=1993] N15 W12 S2 E1 S3 W1 S10 E12 $ W15 S1 W4 N1 W3 N3 W2 $ E2 S3 E3 S1 E4 N1 E3 N10 E1 N3 W1 N2$ PTR= E25FUS=[YR=1993] E10 FOP=[YR=2018] N10 E16 S10 W2 FOP=[YR=1993] S3 W12 N3 E12 $ W14 $ E2 S3 E12 N3 E22 S23 W46 N23 $ W25 $.

EXTRA FEATURES

LN	OB/XF CODE	DESCRIPTION	BLD	CAP	L	W	UNITS	UT	Adj R	ADJ UNIT PRICE	ORIG COND	YEAR ON	YEAR ACTUAL	Q	% COND	OB/XF MKT VALUE	NOTES
1	0811	CONCRETE B	0	100	0	0	922.00	SF	5.20	5.20	100	1992	1992	3	66	3,164	
2	0855	CONC PAVER	0	100	7	15	105.00	SF	3.00	3.00	100	1995	1995	3	72	227	

LAND DESCRIPTION

TOTAL OB/XF 3,391

LN	USE CODE	CLS	LAND USE DESCRIPTION	CAP	RD	LOC ZONE	FRONT	DEPTH	TOT LND UTS	UNIT TYPE	DT	DPTH FACT	% COND	TOT ADJ	UNIT PRICE	ADJ UNIT PRICE	LAND VALUE	OTHER ADJUSTMENTS AND NOTES	YEAR	DENSITY	DECL	FRZ	YR	CONSRV
1	000116	C	SFR MARSH	100	0003	RS-1	0.00	0.00	1.00	UT		1.00	1.00	1.00	500,000.00	500,000.00	500,000							

REVIEW DATE 07/02/2018 BY DJ Total Acres: 0.00 Total Land Value: 500,000 Market: 0 Agricultural: 0 Common: 500,000 PRINTED 08/02/2023 BY SYS