LOT 13
PLANTATION POINT PB 5/269

HAGBERG ANNETTE/
1256 HARRISON POINT TRAIL
FERNANDINA BEACH, FL 32034

2023

00-00-30-0518-0013-0000

BUILDING CHARACTERISTICS

ELEMENT	CD	CONSTRUCTION
Exterior Wall	16	WD FR STUC 100
Roof Structur	03	GABLE/HIP 100
Roof Cover	03	COMP SHNGL 100
Interior Wall	05	DRYWALL 100
Interior Floo	14	CARPET 60
Interior Floo	11	CLAY TILE 40
Air Condition	03	CENTRAL 100
Heating Type	04	AIR DUCTED 100
Bedrooms		3 100
Bathrooms		3 100
Frame	02	WOOD FRAME 100
Stories	1.5	1.5 100
Units		0 100
Quality	01	Quality Level 01
DOR CODE	0100	SINGLE FAMILY
MAP NUM		MKT AREA 03
NEIGHBORHOOD/LOC	3036.00	

AREA TYPE	TOTAL GROSS AREA	PCT OF BASE	TOT ADJ AREA	SUBAREA MARKET VALUE
BAS	2,160	100	2,160	305,413
FGR	664	55	365	51,609
FOP	65	30	20	2,828
FOP	150	30	45	6,363
FUS	331	100	331	46,802
STP	16	10	2	283
STP	18	10	2	283
UOP	179	20	36	5,090
TOTALS	3,583		2,961	418,670

MARKET ADJUSTMENTS

TYPE	MDL	EFF. AREA	TOT ADJ PTS	EFF. BASE RATE	REPL. COST NEW	AYB	EYB	ECON	FNCT		NORM	% COND
0900	11	2,961	126.6706	150.42	445,394	2010	2010	0	0	0	6.00	94.00

1 SNGL FAM – 100% - 2016 Heated Area: 2491 HX Base Yr 2016

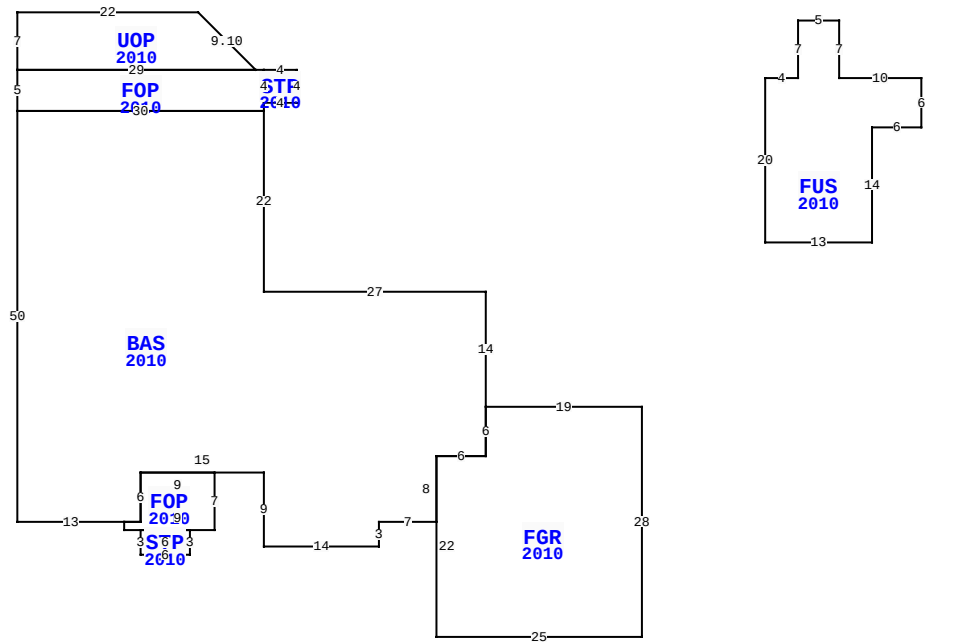

1256 HARRISON POINT TRL, FERNANDINA BEACH

BLD DATE		LGL DATE	
XF DATE		LAND DATE	
INC DATE		AG DATE	

NASSAU COUNTY PROPERTY

PAGE 1 of 1 8

VALUATION SUMMARY

VALUATION BY		STANDARD
Tax Group: 8	Tax Dist:	
BUILDING MARKET VALUE		418,670
TOTAL MARKET OB/XF VALUE		23,539
TOTAL LAND VALUE - MARKET		385,000
TOTAL MARKET VALUE		827,209
SOH/AGL Deduction		259,927
ASSESSED VALUE		567,282
TOTAL EXEMPTION VALUE	HX HB	50,000
BASE TAXABLE VALUE		517,282
TOTAL JUST VALUE		827,209
NCON VALUE		0
INCOME VALUE		
PREVIOUS YEAR MKT VALUE		740,048

PERMIT NUM	DESCRIPTION	AMT	ISSUED
C23261	CO ISSUED	0	06/23/2010
B23684	XFOB	3,935	06/01/2010
G01517	GAS	695	04/01/2010
E22468	ELEC OTHER	0	03/01/2010
B23261	NEW CONSTR	348,997	02/01/2010
P14147	OTHER	0	02/01/2010

SALES DATA

OFF RECORD Number	DATE	TYPE INST	Q / U	V / I	RSN CD	SALE PRICE
9999/9999	9/15/2015	CN	Q	I	02	680,000
GRANTOR: BRITT DAVID V B &						
GRANTEE: HAGBERG ANNETTE						
1656/1922	12/28/2009	WD	U	V	30	100
GRANTOR: BRITT DAVID V B						
GRANTEE: BRITT DAVID V B TRU						

BUILDING NOTES

BUILDING DIMENSIONS

FGR=[YR=2010] W19 BAS=[YR=2010] N14 W27 N22 FOP=[YR=2010] N1 STP=[YR=2010] E4 N4 W4 S4$ N4 W1 UOP=[YR=2010] U7 L7 W22 S7 E29$ W29 S5 E30$ W30 S50 E13 FOP=[YR=2010] S1 E2 STP=[YR=2010] S3 E6 N3 W6$ E9 N7 W9 S6 W2$ E2 N6 E15 S9 E14 N3 E7 N8 E6 N6$ S6 W6 S22 E25 N28$ PTR=N20E15 FUS=[YR=2010] N20 E4 N7 E5 S7 E10 S6 W6 S14 W13$ W15 S20$.

EXTRA FEATURES

L N	OB/XF CODE	DESCRIPTION	BLD	CAP	L	W	UNITS	UT	Adj R	ADJ UNIT PRICE	ORIG COND	YEAR ON	YEAR ACTUAL	Q	% COND	OB/XF MKT VALUE	NOTES
1	0504	FP-ELECTRI	0	100	0	0	1.00	UT	2,000.00	2,000.00	100	2010	2010	3	94	1,880	
2	0855	CONC PAVER	0	100	0	0	1,510.00	SF	10.00	10.00	100	2010	2010	3	92	13,892	
3	0855	CONC PAVER	0	100	0	0	189.00	SF	10.00	10.00	100	2010	2010	3	92	1,739	
4	0855	CONC PAVER	0	100	0	0	206.00	SF	10.00	10.00	100	2010	2010	3	92	1,895	
5	0462	ST/AL FNC	0	100	88	0	352.00	SF	10.00	10.00	100	2010	2010	3	64	2,253	
6	0911	SCRN RM A	0	100	0	0	179.00	SF	17.50	17.50	100	2012	2012	3	60	1,880	

LAND DESCRIPTION

TOTAL OB/XF 23,539

L N	USE CODE	CLS	LAND USE DESCRIPTION	CAP	R D	LOC ZONE	FRONT	DEPTH	TOT LND UTS	UNIT TYPE	D T	DPTH FACT	% COND	TOT ADJ	UNIT PRICE	ADJ UNIT PRICE	LAND VALUE	OTHER ADJUSTMENTS AND NOTES	YEAR	DENSITY	DECL	FRZ	YR	CONSRV
1	000116	C	SFR MARSH	100	0003	RS-1	0.00	0.00	1.00	UT		1.00	1.00	1.10	350,000.00	385,000.00	385,000							

REVIEW DATE 02/06/2018 BY DJX Total Acres: 0.00 Total Land Value: 385,000 Market: 0 Agricultural: 0 Common: 385,000 PRINTED 08/02/2023 BY SYS