LOT 8 IN OR 778/1729
PLANTATION POINT PB 5/269

WELBORN JAMES H & LILA D
1376 HARRISON POINT TRAIL
FERNANDINA BEACH, FL 32034

2023

00-00-30-0518-0008-0000

BUILDING CHARACTERISTICS

ELEMENT	CD	CONSTRUCTION
Exterior Wall	16	WD FR STUC 100
Roof Structur	03	GABLE/HIP 100
Roof Cover	03	COMP SHNGL 100
Interior Wall	05	DRYWALL 100
Interior Floo	12	HARDWOOD 60
Interior Floo	14	CARPET 40
Air Condition	03	CENTRAL 100
Heating Type	04	AIR DUCTED 100
Bedrooms		4 100
Bathrooms		3.5 100
Frame	02	WOOD FRAME 100
Stories	2.	2. 100
Units		0 100
Occupancy	00	NONE 100
Quality	06	Quality Level 06
DOR CODE	0100	SINGLE FAMILY
MAP NUM		MKT AREA 03
NEIGHBORHOOD/LOC	3036.00	

AREA TYPE	TOTAL GROSS AREA	PCT OF BASE	TOT ADJ AREA	SUBAREA MARKET VALUE
BAS	2,170	100	2,170	314,397
FGR	525	55	289	41,871
FOP	80	30	24	3,477
FOP	144	30	43	6,230
FST	32	55	18	2,608
FST	42	55	23	3,332
FUS	208	100	208	30,136
FUS	900	100	900	130,395
STR	180	10	18	2,608
UOP	68	20	14	2,028
TOTALS	4,349		3,707	537,083

MARKET ADJUSTMENTS

TYPE	MDL	EFF. AREA	TOT ADJ PTS	EFF. BASE RATE	REPL. COST NEW	AYB	EYB	ECON	FNCT		NORM	% COND
0500	01	3,707	114.8850	163.71	606,873	1999	1999	0	0	0	11.50	88.50

1 SFR CUST - 100% - 2000 Heated Area: 3278 HX Base Yr 2000

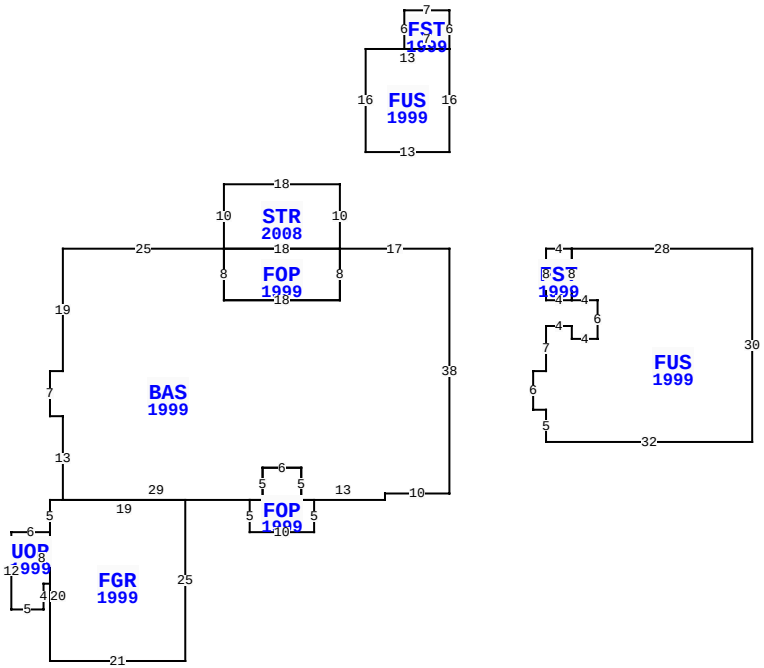

1376 HARRISON POINT TRL, FERNANDINA BEACH

BLD DATE		LGL DATE	
XF DATE		LAND DATE	
INC DATE		AG DATE	

NASSAU COUNTY PROPERTY

PAGE 1 of 1 8

VALUATION SUMMARY

VALUATION BY		STANDARD
Tax Group: 8	Tax Dist:	
BUILDING MARKET VALUE		537,083
TOTAL MARKET OB/XF VALUE		30,152
TOTAL LAND VALUE - MARKET		385,000
TOTAL MARKET VALUE		952,235
SOH/AGL Deduction		574,411
ASSESSED VALUE		377,824
TOTAL EXEMPTION VALUE	HX HB	50,000
BASE TAXABLE VALUE		327,824
TOTAL JUST VALUE		952,235
NCON VALUE		0
INCOME VALUE		
PREVIOUS YEAR MKT VALUE		784,481

PERMIT NUM	DESCRIPTION	AMT	ISSUED
1709428	WINDOWS	7,100	10/26/2017
M1217663	H/AC	0	10/01/2012
B9805407	NEW CONSTR	157,000	09/01/1998

SALES DATA

OFF RECORD Number	DATE	TYPE INST	Q / U	V / I	RSN CD	SALE PRICE
0778/1729	12/09/1996	WD	Q	V		35,000

GRANTOR: PLANTATION POINT JOIN

GRANTEE: WELBORN JAMES H & L

BUILDING NOTES

BUILDING DIMENSIONS

BAS=[YR=1999] W17 STR=[YR=2008] N10 W18 S10 E18$
FOP=[YR=1999] W18 S8 E18 N8$ S8 W18 N8 W25 S19 W2 S7 E2 S13
FGR=[YR=1999] W2 S5 UOP=[YR=1999] W6 S12 E5 N4 E1 N8 $ S20
E21 N25 W19 $ E29 FOP=[YR=1999] S5 E10 N5 W2 N5 W6 S5 W2 $ E2
N5 E6 S5 E13 N1 E10 N38 $ PTR=E15 FST=[YR=1999] E4
FUS=[YR=1999] E28 S30 W32 N5 W2 N6 E2 N7 E4 S2 E4 N6 W4 N8 $
S8 W4 N8 $ W15 $PTR= N15 FUS=[YR=1999] N16 FST=[YR=1999] N6
W7 S6 E7 $ W13 S16 E13 $ S15 $.

EXTRA FEATURES

LN	OB/XF CODE	DESCRIPTION	BLD	CAP	L	W	UNITS	UT	Adj R	ADJ UNIT PRICE	ORIG COND	YEAR ON	YEAR ACTUAL	Q	% COND	OB/XF MKT VALUE	NOTES
1	0500	FP-PRE FAB	0	100	0	0	3.00	UT	3,500.00	3,500.00	100	1999	1999	3	84	8,820	
2	0810	CONCRETE A	0	100	0	0	2,362.00	SF	6.50	6.50	100	1999	1999	3	79	12,129	
3	0825	BRICK	0	100	0	0	1,086.00	SF	8.75	8.75	100	2005	2005	3	96	9,122	
4	0100	BAR-B-Q	0	100	0	0	1.00	UT	300.00	300.00	100	2005	2005	3	27	81	

LAND DESCRIPTION

TOTAL OB/XF 30,152

LN	USE CODE	CLS	LAND USE DESCRIPTION	CAP	RD	LOC ZONE	FRONT	DEPTH	TOT LND UTS	UNIT TYPE	DT	DPTH FACT	% COND	TOT ADJ	UNIT PRICE	ADJ UNIT PRICE	LAND VALUE	OTHER ADJUSTMENTS AND NOTES	YEAR	DENSITY	DECL	FRZ	YR	CONSRV
1	000116	C	SFR MARSH	100	0003	RS-1	0.00	0.00	1.00	UT		1.00	1.00	1.10	350,000.00	385,000.00	385,000							

REVIEW DATE 02/06/2018 BY DJX Total Acres: 0.00 Total Land Value: 385,000 Market: 0 Agricultural: 0 Common: 385,000 PRINTED 08/02/2023 BY SYS