LOT 30
PHILLIPS MANOR SUB PB 2/78

WEAVER CATHARINE REVOCABLE TRUST/WEAVER CATHARINE
1739 PHILIPS MANOR RD
FERNANDINA BEACH, FL 32034

2023

00-00-30-0480-0030-0000

BUILDING CHARACTERISTICS

ELEMENT	CD	CONSTRUCTION
Exterior Wall	10	ABOVE AVG 100
Roof Structur	03	GABLE/HIP 100
Roof Cover	03	COMP SHNGL 100
Interior Wall	05	DRYWALL 100
Interior Floo	12	HARDWOOD 80
Interior Floo	11	CLAY TILE 20
Air Condition	03	CENTRAL 100
Heating Type	04	AIR DUCTED 100
Bedrooms		5 100
Bathrooms		4.5 100
Frame	02	WOOD FRAME 100
Stories	2.	2. 100
Units		0 100
Occupancy	00	NONE 100
Quality	04	Quality Level 04
DOR CODE	0100	SINGLE FAMILY
MAP NUM		MKT AREA 03
NEIGHBORHOOD/LOC	3029.00	

AREA TYPE	TOTAL GROSS AREA	PCT OF BASE	TOT ADJ AREA	SUBAREA MARKET VALUE
BAS	2,829	100	2,829	251,778
FOP	299	30	90	8,010
FOP	495	30	148	13,172
FUS	769	100	769	68,440
UOP	14	20	3	267
UOP	36	20	7	623
UOP	49	20	10	890
TOTALS	4,491		3,856	343,180

MARKET ADJUSTMENTS

TYPE	MDL	EFF. AREA	TOT ADJ PTS	EFF. BASE RATE	REPL. COST NEW	AYB	EYB	ECON	FNCT		NORM	% COND
0100	01	3,856	110.1870	99.44	383,441	2000	2000	0	0	0	10.50	89.50

1 SINGLE FAM – 100% - 2013 Heated Area: 3598 HX Base Yr 2013

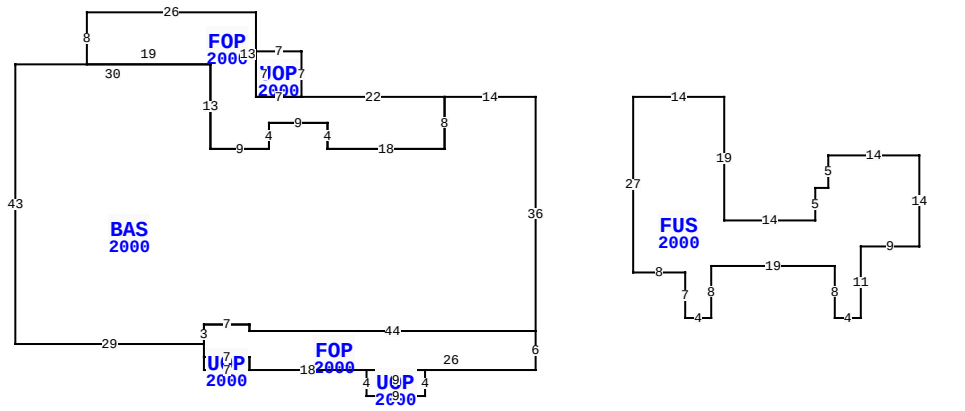

1739 PHILIPS MANOR RD, FERNANDINA BEACH

BLD DATE		LGL DATE	
XF DATE		LAND DATE	
INC DATE		AG DATE	

NASSAU COUNTY PROPERTY

PAGE 1 of 1 8

VALUATION SUMMARY

VALUATION BY		STANDARD
Tax Group: 8	Tax Dist:	
BUILDING MARKET VALUE		343,180
TOTAL MARKET OB/XF VALUE		2,975
TOTAL LAND VALUE - MARKET		250,000
TOTAL MARKET VALUE		596,155
SOH/AGL Deduction		279,803
ASSESSED VALUE		316,352
TOTAL EXEMPTION VALUE	HX HB	50,000
BASE TAXABLE VALUE		266,352
TOTAL JUST VALUE		596,155
NCON VALUE		0
INCOME VALUE		
PREVIOUS YEAR MKT VALUE		567,365

PERMIT NUM	DESCRIPTION	AMT	ISSUED
B9906636	NEW CONSTR	317,886	11/01/1999

SALES DATA

OFF RECORD Number	DATE	TYPE INST	Q / U	V / I	RSN CD	SALE PRICE
2637/536	5/02/2023	WD	U	I	11	100
GRANTOR: WEAVER CATHARINE FOUN						
GRANTEE: WEAVER CATHARINE RE						
1782/1432	3/02/2012	TD	Q	I	02	320,000
GRANTOR: SHORES THOMAS M & NAN						
GRANTEE: WEAVER CATHARINE FO						

BUILDING NOTES

BUILDING DIMENSIONS

BAS=[YR=2000] W14 FOP=[YR=2000] W22 UOP=[YR=2000] N7 W7 S7 E7 $ W7 N13 W26 S8 E19 S13 E9 N4 E9 S4 E18 N8 $ S8 W18 N4 W9 S4 W9 N13 W30 S43 E29 FOP=[YR=2000] S2 UOP=[YR=2000] S2 E7 N2 W7 $ E7 S2 E18 UOP=[YR=2000] S4 E9 N4 W9 $ E26 N6 W44 N1 W7 S3 $ N3 E7 S1 E44 N36 $ PTR= E15 FUS=[YR=2000] E14 S19 E14 N5 E2 N5 E14 S14 W9 S11 W4 N8 W19 S8 W4 N7 W8 N27 $ W15 $.

EXTRA FEATURES

LN	OB/XF CODE	DESCRIPTION	BLD	CAP	L	W	UNITS	UT	Adj R	ADJ UNIT PRICE	ORIG COND	YEAR ON	YEAR ACTUAL	Q	% COND	OB/XF MKT VALUE	NOTES
1	0500	FP-PRE FAB	0	100	0	0	1.00	UT	3,500.00	3,500.00	100	2000	2000	3	85	2,975	

LAND DESCRIPTION

TOTAL OB/XF 2,975

LN	USE CODE	CLS	LAND USE DESCRIPTION	CAP	RD	LOC ZONE	FRONT	DEPTH	TOT LND UTS	UNIT TYPE	DT	DPTH FACT	% COND	TOT ADJ	UNIT PRICE	ADJ UNIT PRICE	LAND VALUE	OTHER ADJUSTMENTS AND NOTES	YEAR	DENSITY	DECL	FRZ	YR	CONSRV
1	000100	C	SFR	100		RS-1	100.00	173.00	1.00	LT		1.00	1.00	1.00	250,000.00	250,000.00	250,000							

REVIEW DATE 06/01/2017 BY DJX Total Acres: 0.00 Total Land Value: 250,000 Market: 0 Agricultural: 0 Common: 250,000 PRINTED 08/02/2023 BY SYS