LOT 66
DUNES OF AMELIA PHASE 2
PBK 8/280

BUNNER DEBORAH &/DUGGER DEBORAH M
221 NORTH 4TH STREET
FERNANDINA BEACH, FL 32034

2023

00-00-30-044D-0066-0000

NASSAU COUNTY PROPERTY

BUILDING CHARACTERISTICS

ELEMENT	CD	CONSTRUCTION
Exterior Wall	10	ABOVE AVG 100
Roof Structur	03	GABLE/HIP 100
Roof Cover	03	COMP SHNGL 100
Interior Wall	05	DRYWALL 100
Interior Floo	11	CLAY TILE 60
Interior Floo	14	CARPET 40
Air Condition	03	CENTRAL 100
Heating Type	04	AIR DUCTED 100
Bedrooms		5 100
Bathrooms		4 100
Frame	02	WOOD FRAME 100
Stories	2.	2. 100
Units		0 100
Occupancy	00	NONE 100
Quality	06	Quality Level 06

DOR CODE	0100	SINGLE FAMILY	
MAP NUM		MKT AREA	01
NEIGHBORHOOD/LOC	2121.100		

AREA TYPE	TOTAL GROSS AREA	PCT OF BASE	TOT ADJ AREA	SUBAREA MARKET VALUE
BAS	1,552	100	1,552	235,497
FGR	452	55	249	37,783
FOP	96	30	29	4,401
FOP	108	30	32	4,856
FOP	200	30	60	9,104
FUS	1,070	100	1,070	162,359
STR	30	10	3	456
TOTALS	3,508		2,995	454,454

MARKET ADJUSTMENTS

TYPE	MDL	EFF. AREA	TOT ADJ PTS	EFF. BASE RATE	REPL. COST NEW	AYB	EYB	ECON	FNCT		NORM	% COND
0900	01	2,995	128.4228	152.50	456,738	2020	2020	0	0	0	0.50	99.50

1 SNGL FAM – 0% - 2023 Heated Area: 2622 HX Base Yr

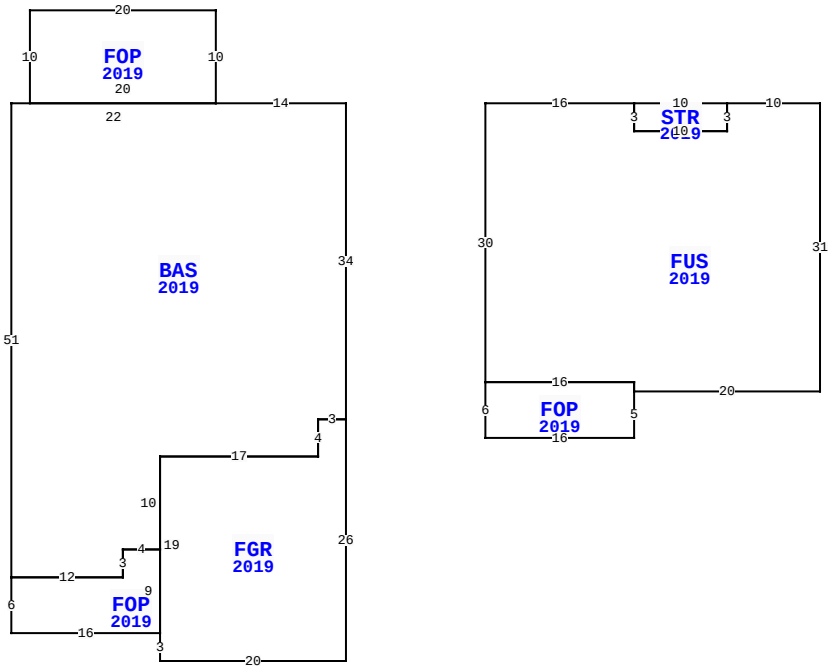

2785 TURTLE SHORES DR, FERNANDINA BEACH

BLD DATE		LGL DATE	
XF DATE		LAND DATE	
INC DATE		AG DATE	

NASSAU COUNTY PROPERTY — VALUATION SUMMARY

VALUATION BY	STANDARD
Tax Group: 2	Tax Dist:
BUILDING MARKET VALUE	454,454
TOTAL MARKET OB/XF VALUE	54,578
TOTAL LAND VALUE - MARKET	115,000
TOTAL MARKET VALUE	624,032
SOH/AGL Deduction	0
ASSESSED VALUE	624,032
TOTAL EXEMPTION VALUE	0
BASE TAXABLE VALUE	624,032
TOTAL JUST VALUE	624,032
NCON VALUE	0
INCOME VALUE	
PREVIOUS YEAR MKT VALUE	595,752

PERMIT NUM	DESCRIPTION	AMT	ISSUED
20200730	SWIM POOL	0	10/14/2020
20190382	CO ISSUED	0	02/28/2020
20190382	NEW CONSTR	0	07/05/2019

SALES DATA

OFF RECORD Number	DATE	TYPE INST	Q U	V I	RSN CD	SALE PRICE
2609/0901	12/20/2022	QC	U	I	11	100
GRANTOR: BUNNER DEBORAH						
GRANTEE: BUNNER DEBORAH & DE						
2554/1838	4/11/2022	WD	Q	I	01	785,000
GRANTOR: FARGO BENJAMIN E & SA						
GRANTEE: BUNNER DEBORAH						

BUILDING NOTES

BUILDING DIMENSIONS

BAS=[YR=2019] W14 FOP=[YR=2019] N10 W20 S10 E20$ W22 S51
FOP=[YR=2019] S6 E16 FGR=[YR=2019] S3 E20 N26 W3 S4 W17 S19$
N9 W4 S3 W12$ E12 N3 E4 N10 E17 N4 E3 N34$ PTR=E15
FUS=[YR=2019] E16 STR=[YR=2019] E10 S3 W10 N3$ S3 E10 N3 E10
S31 W20 FOP=[YR=2019] S5 W16 N6 E16 S1$ N1 W16 N30$ W15$.

EXTRA FEATURES

LN	OB/XF CODE	DESCRIPTION	BLD	CAP	L	W	UNITS	UT	Adj R	ADJ UNIT PRICE	ORIG COND	YEAR ON	YEAR ACTUAL	Q	% COND	OB/XF MKT VALUE	NOTES
1	0500	FP-PRE FAB	0	0	0	0	1.00	UT	3,500.00	3,500.00	100	2020	2020	3	99	3,465	
2	0855	CONC PAVER	0	0	0	0	558.00	SF	10.00	10.00	100	2020	2020	3	99	5,524	
3	0911	SCRN RM A	0	0	30	21	630.00	SF	17.50	17.50	100	2021	2021	3	97	10,694	
4	0861	POOL GUNIT	0	0	0	0	350.00	SF	85.00	85.00	100	2021	2021	3	98	29,155	
5	0855	CONC PAVER	0	0	0	0	380.00	SF	10.00	10.00	100	2021	2021	3	100	3,800	
6	0871	POOL HTR R	0	0	0	0	1.00	UT	2,000.00	2,000.00	100	2021	2021	3	97	1,940	

LAND DESCRIPTION

TOTAL OB/XF 54,578

LN	USE CODE	CLS	LAND USE DESCRIPTION	CAP	RD	LOC ZONE	FRONT	DEPTH	TOT LND UTS	UNIT TYPE	DT	DPTH FACT	% COND	TOT ADJ	UNIT PRICE	ADJ UNIT PRICE	LAND VALUE	OTHER ADJUSTMENTS AND NOTES	YEAR	DENSITY	DECL	FRZ	YR	CONSRV
1	000100	C	SFR	0			0.00	0.00	1.00	LT		1.00	1.00	1.00	115,000.00	115,000.00	115,000							

REVIEW DATE 12/13/2021 BY DJ Total Acres: 0.00 Total Land Value: 115,000 Market: 0 Agricultural: 0 Common: 115,000 PRINTED 08/02/2023 BY SYS