LOT 15
DUNES OF AMELIA PHASE 1
PBK 8/88

PALMER FRANK E & NANCY L
302 DUNES OF AMELIA DR
FERNANDINA BEACH, FL 32034

2023

00-00-30-044D-0015-0000

BUILDING CHARACTERISTICS

ELEMENT	CD	CONSTRUCTION
Exterior Wall	10	ABOVE AVG 100
Roof Structur	08	IRREGULAR 100
Roof Cover	03	COMP SHNGL 100
Interior Wall	06	CUST PANEL 100
Interior Floo	11	CLAY TILE 60
Interior Floo	14	CARPET 40
Air Condition	03	CENTRAL 100
Heating Type	04	AIR DUCTED 100
Bedrooms		4 100
Bathrooms		3 100
Frame	02	WOOD FRAME 100
Stories	1.5	1.5 100
Units		0 100
Occupancy	00	NONE 100
Quality	06	Quality Level 06

DOR CODE 0100 SINGLE FAMILY
MAP NUM | MKT AREA 01
NEIGHBORHOOD/LOC 2121.00

AREA TYPE	TOTAL GROSS AREA	PCT OF BASE	TOT ADJ AREA	SUBAREA MARKET VALUE
BAS	1,909	100	1,909	318,358
FOP	48	30	14	2,334
FOP	224	30	67	11,173
FUS	372	100	372	62,037
SFB	420	80	336	56,033
STR	64	10	6	1,001
TOTALS	3,037		2,704	450,937

MARKET ADJUSTMENTS

TYPE	MDL	EFF. AREA	TOT ADJ PTS	EFF. BASE RATE	REPL. COST NEW	AYB	EYB	ECON	FNCT		NORM	% COND
0900	01	2,704	143.2992	170.17	460,140	2017	2017	0	0	0	2.00	98.00

1 SNGL FAM – 100% - 2021 Heated Area: 2617 HX Base Yr 2021

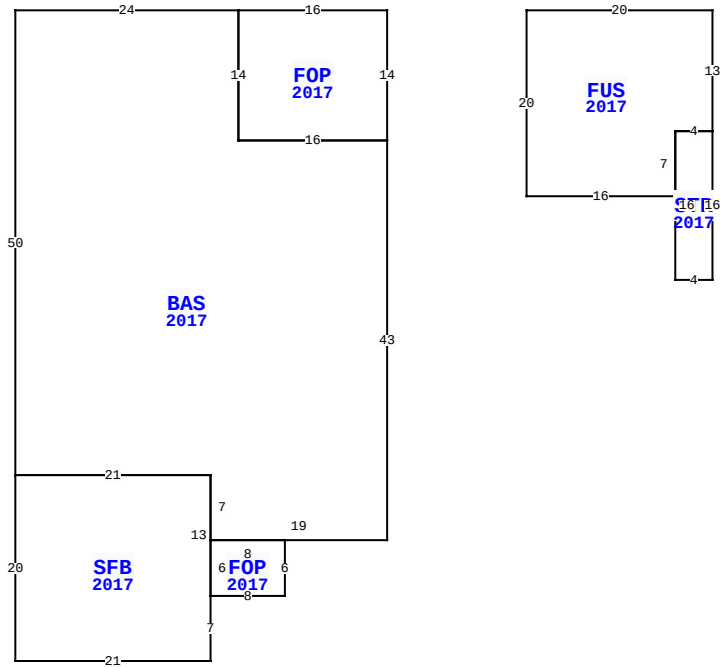

302 DUNES OF AMELIA DR, FERNANDINA BEACH

BLD DATE		LGL DATE	
XF DATE		LAND DATE	
INC DATE		AG DATE	

NASSAU COUNTY PROPERTY

PAGE 1 of 1 2

VALUATION SUMMARY

VALUATION BY		STANDARD
Tax Group: 2	Tax Dist:	
BUILDING MARKET VALUE		450,937
TOTAL MARKET OB/XF VALUE		10,199
TOTAL LAND VALUE - MARKET		115,000
TOTAL MARKET VALUE		576,136
SOH/AGL Deduction		174,549
ASSESSED VALUE		401,587
TOTAL EXEMPTION VALUE	HX HB	50,000
BASE TAXABLE VALUE		351,587
TOTAL JUST VALUE		576,136
NCON VALUE		0
INCOME VALUE		
PREVIOUS YEAR MKT VALUE		498,657

PERMIT NUM	DESCRIPTION	AMT	ISSUED
20163004	NEW CONSTR	286,834	11/02/2016

SALES DATA

OFF RECORD Number	DATE	TYPE INST	Q U	V I	RSN CD	SALE PRICE
2268/0537	4/12/2019	WD	Q	I	02	425,000
GRANTOR: KOHLER PROPERTY DEVEL						
GRANTEE: PALMER FRANK E & NA						
2148/0343	9/22/2017	WD	Q	I	01	373,000
GRANTOR: DREAM FINDERS HOMES L						
GRANTEE: KOHLER PROPERTY DEV						

BUILDING NOTES

BUILDING DIMENSIONS

FOP=[YR=2017] W16 BAS=[YR=2017] W24 S50 SFB=[YR=2017] S20 E21 N7 FOP=[YR=2017] E8 N6 W8 S6$ N13 W21$ E21 S7 E19 N43 W16 N14$ S14 E16 N14$ PTR= E15 FUS=[YR=2017] E20 S13 STR=[YR=2017] S16 W4 N16 E4$ W4 S7 W16 N20$ W15$.

EXTRA FEATURES

LN	OB/XF CODE	DESCRIPTION	BLD	CAP	L	W	UNITS	UT	Adj R	ADJ UNIT PRICE	ORIG COND	YEAR ON	YEAR ACTUAL	Q	% COND	OB/XF MKT VALUE	NOTES
1	0855	CONC PAVER	0	100	0	0	1,502.00	SF	7.00	7.00	100	2017	2017	3	97	10,199	

LAND DESCRIPTION

TOTAL OB/XF 10,199

LN	USE CODE	CLS	LAND USE DESCRIPTION	CAP	RD	LOC ZONE	FRONT	DEPTH	TOT LND UTS	UNIT TYPE	DT	DPTH FACT	% COND	TOT ADJ	UNIT PRICE	ADJ UNIT PRICE	LAND VALUE	OTHER ADJUSTMENTS AND NOTES	YEAR	DENSITY	DECL	FRZ	YR	CONSRV
1	000100	C	SFR	100			0.00	0.00	1.00	LT		1.00	1.00	1.00	115,000.00	115,000.00	115,000							

REVIEW DATE 07/27/2017 BY DJ Total Acres: 0.00 Total Land Value: 115,000 Market: 0 Agricultural: 0 Common: 115,000 PRINTED 08/02/2023 BY SYS