PT OF LOTS 90 & 105 (S1-2)
PT OR 2046/711
ESMT OR 1244/1836

ZT HOLDINGS #03 LLC
3948 3RD ST S #361
JACKSONVILLE BEACH, FL 32250

2023

00-00-30-044B-0105-0012

BUILDING CHARACTERISTICS

ELEMENT	CD	CONSTRUCTION
Exterior Wall	12	CEDAR 80
Exterior Wall	28	GLASS THRM 20
Roof Structur	04	WOOD TRUSS 100
Roof Cover	11	SLATE 100
Interior Wall	06	CUST PANEL 100
Interior Floo	11	CLAY TILE 50
Interior Floo	14	CARPET 50
Ceiling	02	F.NOT SUS 100
Air Condition	03	CENTRAL 100
Heating Type	04	AIR DUCTED 100
Fixtures		27 100
Frame	02	WOOD FRAME 100
Story Height		10 100
RMS		5 100
Stories	1.	1. 100
Units		0 100
Occupancy	00	NONE 100
Quality	03	Quality Level 03
DOR CODE	2100	RESTAURANTS/CAFE
MAP NUM		MKT AREA 01
NEIGHBORHOOD/LOC	2022.00	

AREA TYPE	TOTAL GROSS AREA	PCT OF BASE	TOT ADJ AREA	SUBAREA MARKET VALUE
BAS	5,422	100	5,422	771,329
CAN	396	30	119	16,929
CAN	180	30	54	7,682
CAN	800	30	240	34,142
DCK	1,194	10	119	16,929
DCK	480	10	48	6,828
FAT	295	20	59	8,394
FST	110	50	55	7,824
ULP	140	15	21	2,988
ULP	148	15	22	3,130
TOTALS	9,456		6,233	886,701

MARKET ADJUSTMENTS

TYPE	MDL	EFF. AREA	TOT ADJ PTS	EFF. BASE RATE	REPL. COST NEW	AYB	EYB	ECON	FNCT		NORM	% COND
2101	04	6,233	125.4066	222.28	1,385,471	2003	2003	20	0	0	16.00	64.00

1 RSTARANT 1 – 0% - 0 Heated Area: 5481 HX Base Yr

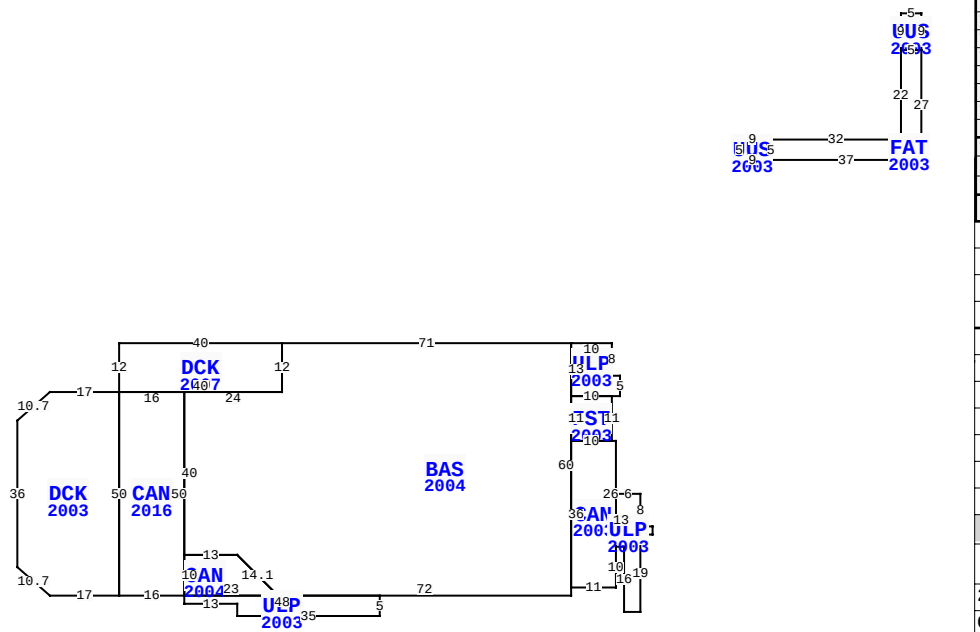

** This building has 13 Sub-Areas

960062 GATEWAY BLVD, FERNANDINA BEACH

BLD DATE	01/20/2022	KK	LGL DATE	
XF DATE	01/20/2022	KK	LAND DATE	01/20/2022 KK
INC DATE			AG DATE	

EXTRA FEATURES

LN	OB/XF CODE	DESCRIPTION	BLD	CAP	L	W	UNITS	UT	Adj R	ADJ UNIT PRICE	ORIG COND	YEAR ON	YEAR ACTUAL	Q	% COND	OB/XF MKT VALUE	NOTES
1	0803	ASPHALT C	0	0	0	0	18,020.00	SF	2.00	2.00	100	2003	2003	3	54	19,462	
2	0400	CONC CURB	0	0	0	0	660.00	LF	15.00	15.00	100	2003	2003	3	88	8,712	
3	0402	CONC BUMPE	0	0	0	0	5.00	UT	25.00	25.00	100	2003	2003	3	88	110	
4	0811	CONCRETE B	0	0	0	0	995.00	SF	5.20	5.20	100	2003	2003	3	84	4,346	
5	0810	CONCRETE A	0	0	0	0	227.00	SF	6.50	6.50	100	2003	2003	3	84	1,239	
6	0810	CONCRETE A	0	0	0	0	251.00	SF	6.50	6.50	100	2003	2003	3	84	1,370	
7	1126	CB/STC 8"	0	0	0	0	279.00	SF	8.00	8.00	100	2003	2003	3	84	1,875	
8	0463	FENCE GATE	0	0	0	0	2.00	UT	300.00	300.00	100	2003	2003	3	64	384	
9	0810	CONCRETE A	0	0	0	0	350.00	SF	6.50	6.50	100	2003	2003	3	84	1,911	
10	0504	FP-ELECTRI	0	0	0	0	1.00	UT	2,000.00	2,000.00	100	2003	2003	3	88	1,760	

LAND DESCRIPTION

TOTAL OB/XF 41,169

LN	USE CODE	CLS	LAND USE DESCRIPTION	CAP	RD	LOC ZONE	FRONT	DEPTH	TOT LND UTS	UNIT TYPE	DT	DPTH FACT	% COND	TOT ADJ	UNIT PRICE	ADJ UNIT PRICE	LAND VALUE	OTHER ADJUSTMENTS AND NOTES	YEAR	DENSITY	DECL	FRZ	YR	CONSRV
1	002100	C	RESTAURANT	0	0004	C-2	0.00	0.00	53,143.00	SF		1.00	1.00	0.75	10.00	7.50	398,572							

NASSAU COUNTY PROPERTY

PAGE 1 of 3 2

VALUATION SUMMARY

VALUATION BY	DIRECT_CAP
Tax Group: 2	Tax Dist:
BUILDING MARKET VALUE	0
TOTAL MARKET OB/XF VALUE	0
TOTAL LAND VALUE - MARKET	0
TOTAL MARKET VALUE	1,158,471
SOH/AGL Deduction	126,404
ASSESSED VALUE	1,032,067
TOTAL EXEMPTION VALUE	0
BASE TAXABLE VALUE	1,032,067
TOTAL JUST VALUE	1,158,471
NCON VALUE	0
INCOME VALUE	1,158,471
PREVIOUS YEAR MKT VALUE	1,154,175

PERMIT NUM	DESCRIPTION	AMT	ISSUED
20162381	H/AC	23,490	08/30/2016
20162183	REMODEL	19,512	08/10/2016
20162107	CO ISSUED	35,000	08/03/2016
20161725	DEMOLITION	6,000	06/22/2016
P12868	OTHER	0	11/01/2007
M13324	MECH OTHER	0	09/01/2007

SALES DATA

OFF RECORD Number	DATE	TYPE INST	Q / U	V / I	RSN CD	SALE PRICE
2046/0711	5/17/2016	SW	Q	I	05	890,000
GRANTOR: GASPAR HOLDINGS LLC						
GRANTEE: ZT HOLDINGS #03 LLC						
1722/0895	1/27/2011	QC	U	I	11	100
GRANTOR: THE SMALL BUSINESS AD						
GRANTEE: ZIONS FIRST NATIONA						

BUILDING NOTES

BUILDING DIMENSIONS

BAS=[YR=2004] W71 DCK=[YR=2007] W40 S12 DCK=[YR=2003] W17 L8 D7 S36 D7 R8 E17 N50$ CAN=[YR=2016] S50 E16 ULP=[YR=2003] S2 E13 S3 E35 N5 W48$ CAN=[YR=2004] E23 U10 L10 W13 S10 $ N50 W16$ E40 N12$ S12 W24 S40 E13 D10 R10 E72 N2 CAN=[YR=2003] E11 N10 ULP=[YR=2003] E2 S16 E4 N19 E3 N2 W3 N8 W6 S13$ N26 W1 FST=[YR=2003] N11 ULP=[YR=2003] E2 N5 W2 N8 W10 S13 E10$ W10 S11 E10$ W10 S36$ N60$ PTR= E40 N50 UUS=[YR=2003] S5 E9 FAT=[YR=2003] E37 N27 UUS=[YR=2003] N9 W5 S9 E5$ W5 S22 W32 S5$ N5 W9$ S50 W40$.

REVIEW DATE 01/20/2022 BY KK Total Acres: 0.00 Total Land Value: 0 Market: 0 Agricultural: 0 Common: 0 PRINTED 08/02/2023 BY SYS

PT OF LOTS 90 & 105 (S1-2)
PT OR 2046/711
ESMT OR 1244/1836

ZT HOLDINGS #03 LLC
3948 3RD ST S #361
JACKSONVILLE BEACH, FL 32250

2023

00-00-30-044B-0105-0012

NASSAU COUNTY PROPERTY

BUILDING CHARACTERISTICS

ELEMENT	CD	CONSTRUCTION

DOR CODE	2100	RESTAURANTS/CAFE	
MAP NUM		MKT AREA	01
NEIGHBORHOOD/LOC	2022.00		

AREA TYPE	TOTAL GROSS AREA	PCT OF BASE	TOT ADJ AREA	SUBAREA MARKET VALUE
TOTALS				

MARKET ADJUSTMENTS

TYPE	MDL	EFF. AREA	TOT ADJ PTS	EFF. BASE RATE	REPL. COST NEW	AYB	EYB	ECON	FNCT		NORM	% COND

VALUATION SUMMARY

VALUATION BY	DIRECT_CAP
Tax Group: 2	Tax Dist:
BUILDING MARKET VALUE	0
TOTAL MARKET OB/XF VALUE	0
TOTAL LAND VALUE - MARKET	0
TOTAL MARKET VALUE	1,158,471
SOH/AGL Deduction	126,404
ASSESSED VALUE	1,032,067
TOTAL EXEMPTION VALUE	0
BASE TAXABLE VALUE	1,032,067
TOTAL JUST VALUE	1,158,471
NCON VALUE	0
INCOME VALUE	1,158,471
PREVIOUS YEAR MKT VALUE	1,154,175

PERMIT NUM	DESCRIPTION	AMT	ISSUED
C20125	CO ISSUED	0	06/01/2007
B20125	REMODEL	30,000	06/01/2007

SALES DATA

OFF RECORD Number	DATE	TYPE INST	Q / U	V / I	RSN CD	SALE PRICE
2046/0711	5/17/2016	SW	Q	I	05	890,000
GRANTOR: GASPAR HOLDINGS LLC						
GRANTEE: ZT HOLDINGS #03 LLC						
1722/0895	1/27/2011	QC	U	I	11	100
GRANTOR: THE SMALL BUSINESS AD						
GRANTEE: ZIONS FIRST NATIONA						

BLD DATE	01/20/2022	KK	LGL DATE	
XF DATE	01/20/2022	KK	LAND DATE	01/20/2022 KK
INC DATE			AG DATE	

BUILDING NOTES

BUILDING DIMENSIONS

EXTRA FEATURES

LN	OB/XF CODE	DESCRIPTION	BLD	CAP	L	W	UNITS	UT	Adj R	ADJ UNIT PRICE	ORIG COND	YEAR ON	YEAR ACTUAL	Q	% COND	OB/XF MKT VALUE	NOTES
13	0972	ST LGHT UN	0	0	0	0	1.00	UT	1,518.00	1,518.00	100	2003	2003	3	64	972	
14	0965	SPRNK FIRE	0	0	0	0	30.00	UT	240.00	240.00	100	2003	2003	3	84	6,048	
15	0381	COOLER	0	0	10	10	100.00	SF	82.50	82.50	100	2003	2003	3	54	4,455	
16	0381	COOLER	0	0	12	10	120.00	SF	82.50	82.50	100	2003	2003	3	54	5,346	
17	0383	FREEZER	0	0	8	10	80.00	SF	105.00	105.00	100	2003	2003	3	54	4,536	
18	0381	COOLER	0	0	8	6	48.00	SF	82.50	82.50	100	2003	2003	3	54	2,138	
19	0964	HALON SYST	0	0	21	4	84.00	SF	50.00	50.00	100	2003	2003	3	84	3,528	
20	0978	SECURTY LT	0	0	0	0	2.00	UT	450.00	450.00	100	2003	2003	3	64	576	
21	0461	IRON FENCE	0	0	19	4	76.00	SF	8.50	8.50	100	2003	2003	3	88	568	
22	0418	EXHST FAN	0	0	0	0	3.00	UT	400.00	400.00	100	2003	2003	3	22	264	

TOTAL OB/XF 28,431

LAND DESCRIPTION

LN	USE CODE	CLS	LAND USE DESCRIPTION	CAP	RD	LOC ZONE	FRONT	DEPTH	TOT LND UTS	UNIT TYPE	DT	DPTH FACT	% COND	TOT ADJ	UNIT PRICE	ADJ UNIT PRICE	LAND VALUE	OTHER ADJUSTMENTS AND NOTES	YEAR	DENSITY	DECL	FRZ	YR	CONSRV

REVIEW DATE 01/20/2022 BY KK Total Acres: 0.00 Total Land Value: 0 Market: 0 Agricultural: 0 Common: 0 PRINTED 08/02/2023 BY SYS

PT OF LOTS 90 & 105 (S1-2)
PT OR 2046/711
ESMT OR 1244/1836

ZT HOLDINGS #03 LLC
3948 3RD ST S #361
JACKSONVILLE BEACH, FL 32250

2023

00-00-30-044B-0105-0012

BUILDING CHARACTERISTICS

ELEMENT	CD	CONSTRUCTION

DOR CODE	2100	RESTAURANTS/CAFE	
MAP NUM		MKT AREA	01
NEIGHBORHOOD/LOC	2022.00		

AREA TYPE	TOTAL GROSS AREA	PCT OF BASE	TOT ADJ AREA	SUBAREA MARKET VALUE
TOTALS				

MARKET ADJUSTMENTS

TYPE	MDL	EFF. AREA	TOT ADJ PTS	EFF. BASE RATE	REPL. COST NEW	AYB	EYB	ECON	FNCT		NORM	% COND

BLD DATE	01/20/2022	KK	LGL DATE
XF DATE	01/20/2022	KK	LAND DATE 01/20/2022 KK
INC DATE			AG DATE

NASSAU COUNTY PROPERTY

PAGE 3 of 3 2

VALUATION SUMMARY

VALUATION BY	DIRECT_CAP
Tax Group: 2	Tax Dist:
BUILDING MARKET VALUE	0
TOTAL MARKET OB/XF VALUE	0
TOTAL LAND VALUE - MARKET	0
TOTAL MARKET VALUE	1,158,471
SOH/AGL Deduction	126,404
ASSESSED VALUE	1,032,067
TOTAL EXEMPTION VALUE	0
BASE TAXABLE VALUE	1,032,067
TOTAL JUST VALUE	1,158,471
NCON VALUE	0
INCOME VALUE	1,158,471
PREVIOUS YEAR MKT VALUE	1,154,175

PERMIT NUM	DESCRIPTION	AMT	ISSUED

SALES DATA

OFF RECORD Number	DATE	TYPE INST	Q U /	V I /	RSN CD	SALE PRICE
2046/0711	5/17/2016	SW	Q	I	05	890,000
GRANTOR: GASPAR HOLDINGS LLC						
GRANTEE: ZT HOLDINGS #03 LLC						
1722/0895	1/27/2011	QC	U	I	11	100
GRANTOR: THE SMALL BUSINESS AD						
GRANTEE: ZIONS FIRST NATIONA						

BUILDING NOTES

BUILDING DIMENSIONS

EXTRA FEATURES

LN	OB/XF CODE	DESCRIPTION	BLD	CAP	L	W	UNITS	UT	Adj R	ADJ UNIT PRICE	ORIG COND	YEAR ON	YEAR ACTUAL	Q	% COND	OB/XF MKT VALUE	NOTES
23	0972	ST LGHT UN	0	0	0	0	1.00	UT	1,518.00	1,518.00	100	2016	2016	3	92	1,397	
24	1076	TRELLIS A	0	0	0	0	1,008.00	SF	7.50	7.50	100	2016	2016	3	84	6,350	
25	0479	VF PICKET	0	0	0	0	203.00	LF	7.50	7.50	100	2016	2016	3	92	1,401	
26	0920	CWALL-WD/M	0	0	0	0	117.00	LF	390.00	390.00	100	2003	2003	3	22	10,039	

LAND DESCRIPTION

TOTAL OB/XF 19,187

LN	USE CODE	CLS	LAND USE DESCRIPTION	CAP	RD	LOC ZONE	FRONT	DEPTH	TOT LND UTS	UNIT TYPE	DT	DPTH FACT	% COND	TOT ADJ	UNIT PRICE	ADJ UNIT PRICE	LAND VALUE	OTHER ADJUSTMENTS AND NOTES	YEAR	DENSITY	DECL	FRZ	YR	CONSRV

REVIEW DATE 01/20/2022 BY KK Total Acres: 0.00 Total Land Value: 0 Market: 0 Agricultural: 0 Common: 0 PRINTED 08/02/2023 BY SYS